BALL FACTORY

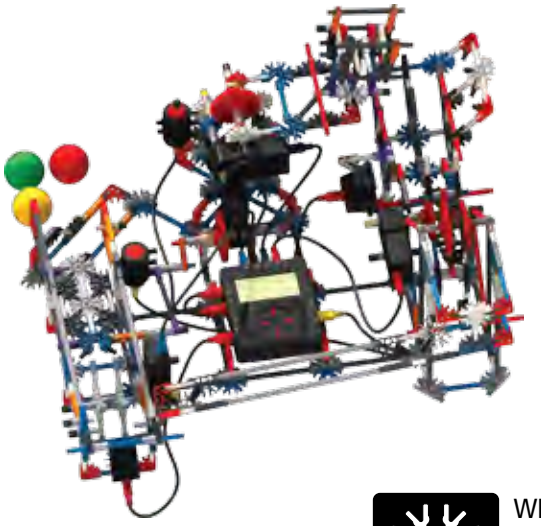

When you see this icon, head to **www.knex.com/instructions** and enter code **79100** for helpful building tip videos.

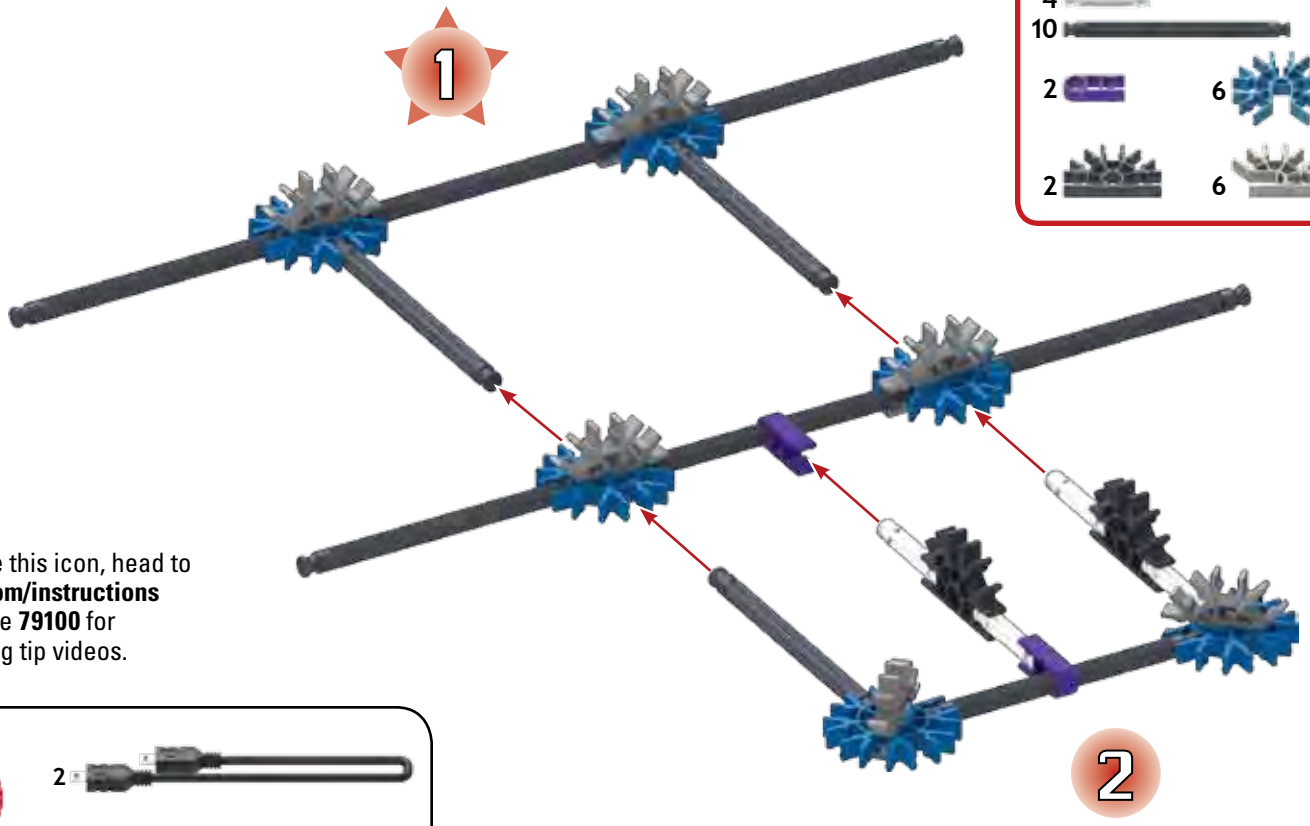

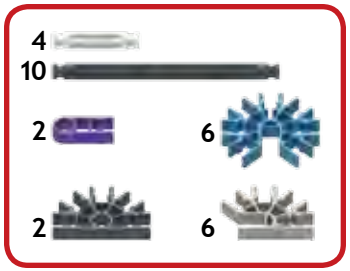

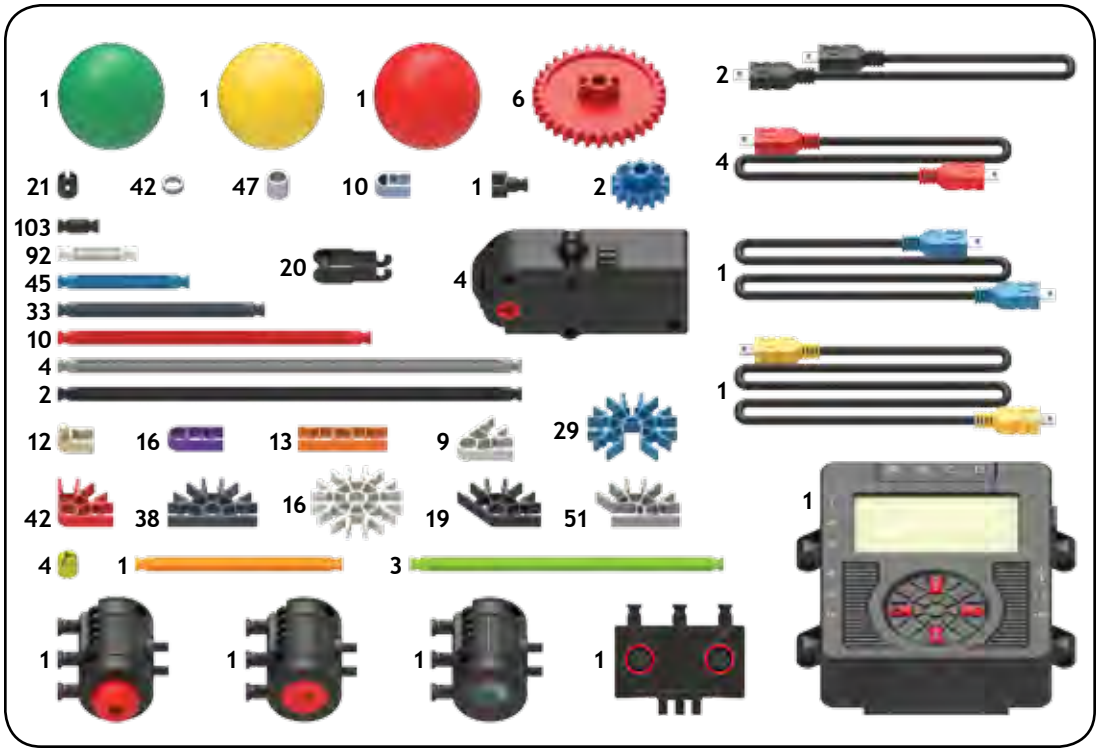

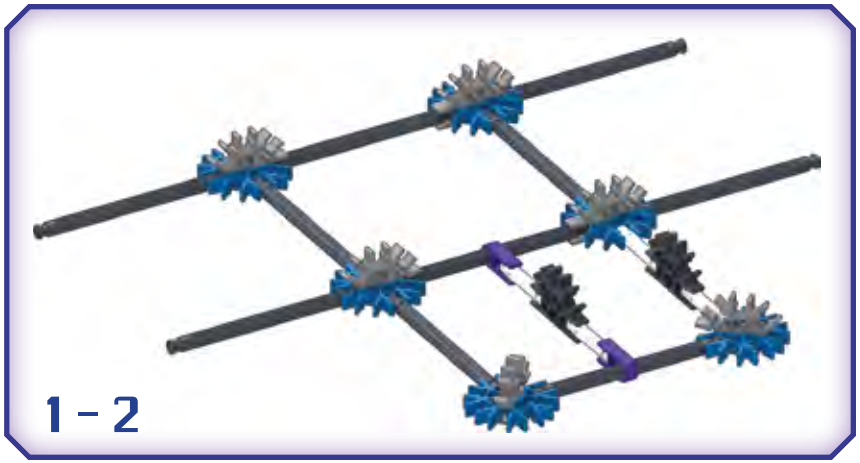

Did you install 6 AA (or LR6) batteries in the Control Box?

3

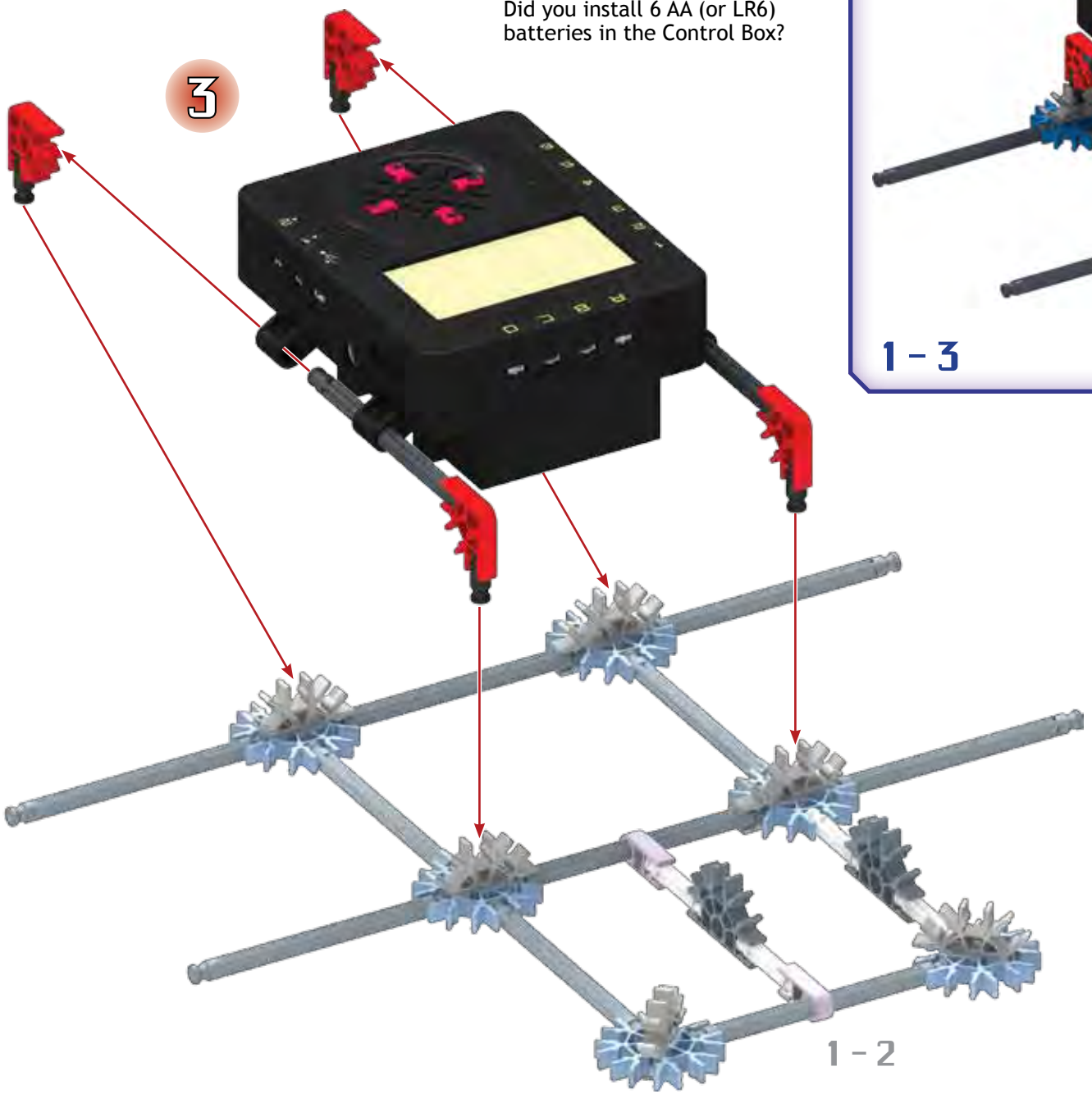

1 – 2

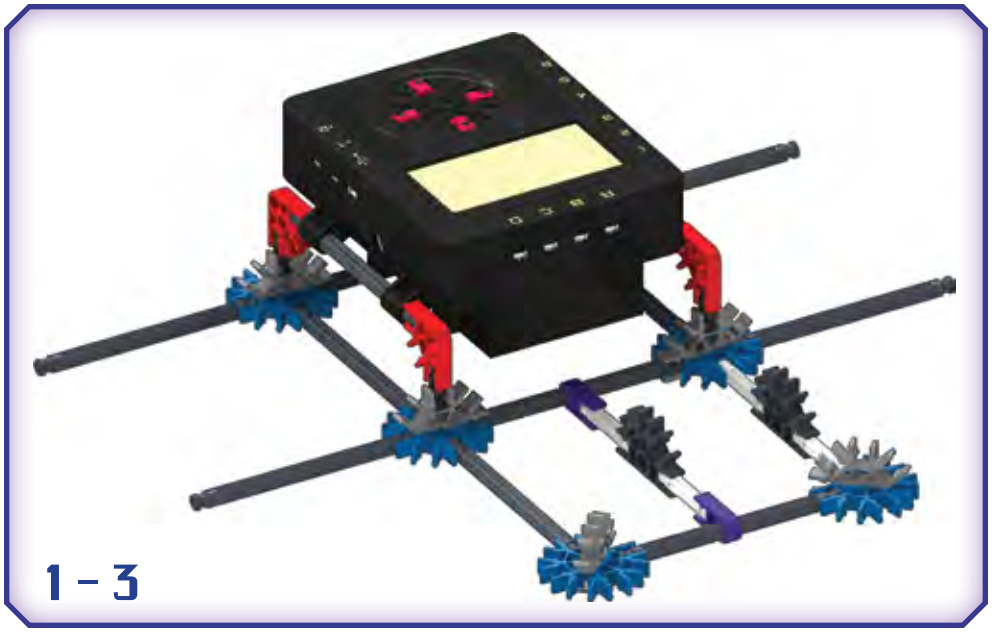

1 – 3

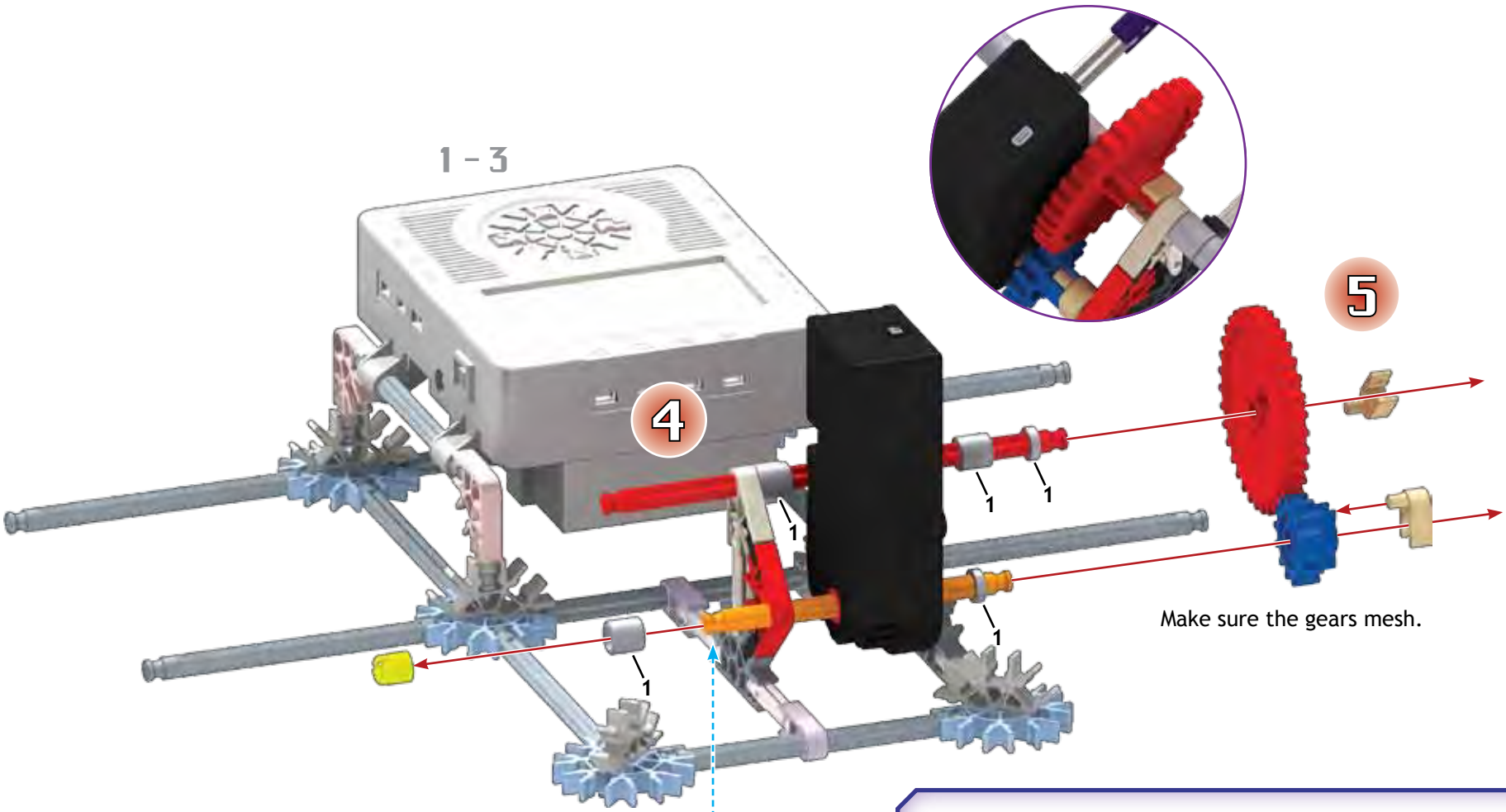

Make sure the gears mesh.

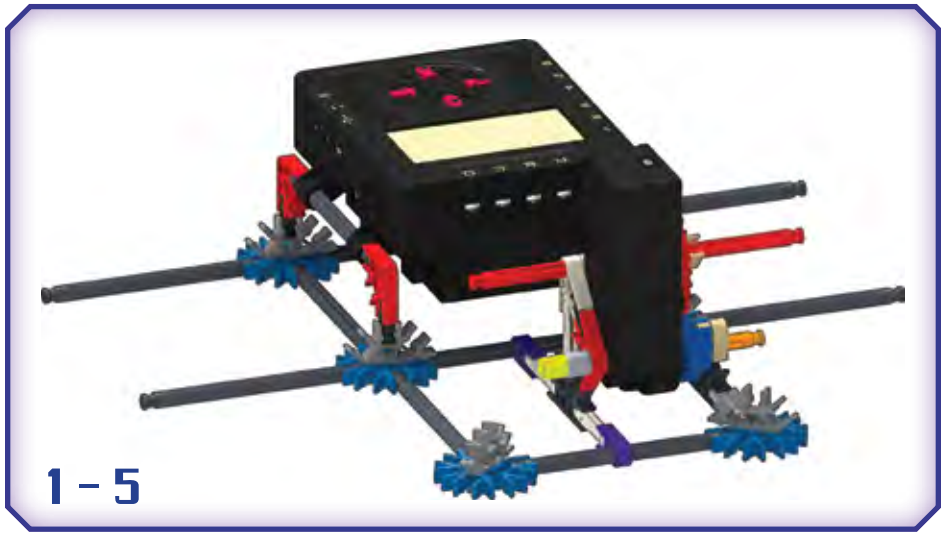

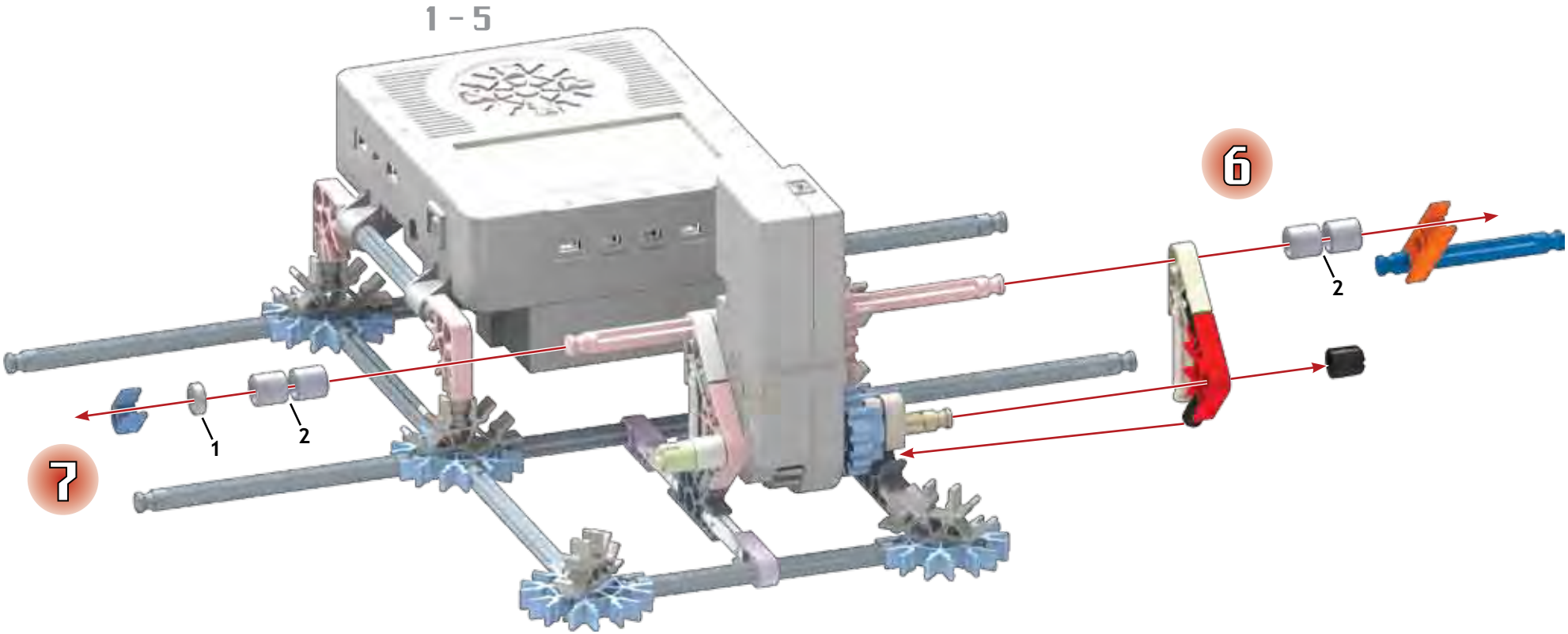
1 - 5
6
7
1
2
2

1
2
1
1
1
1
4
1
1
1

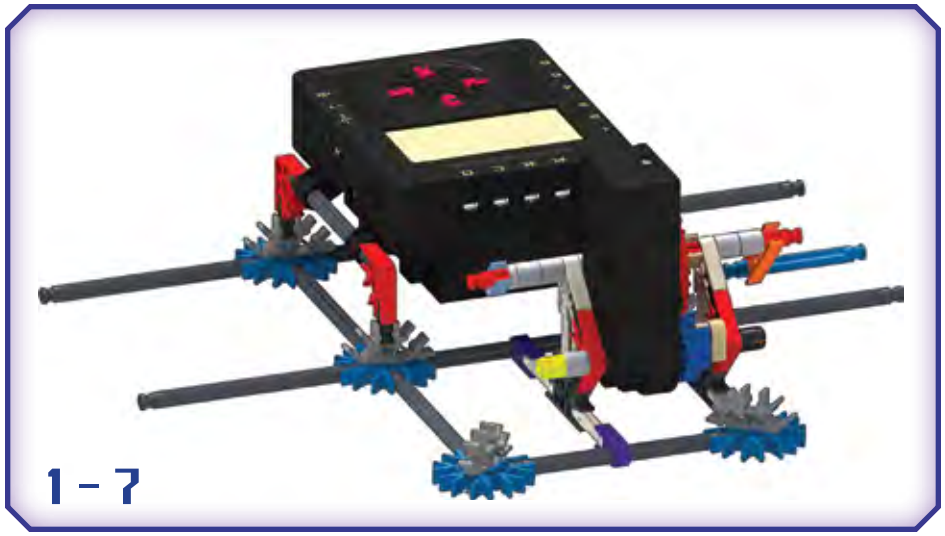
1 - 7

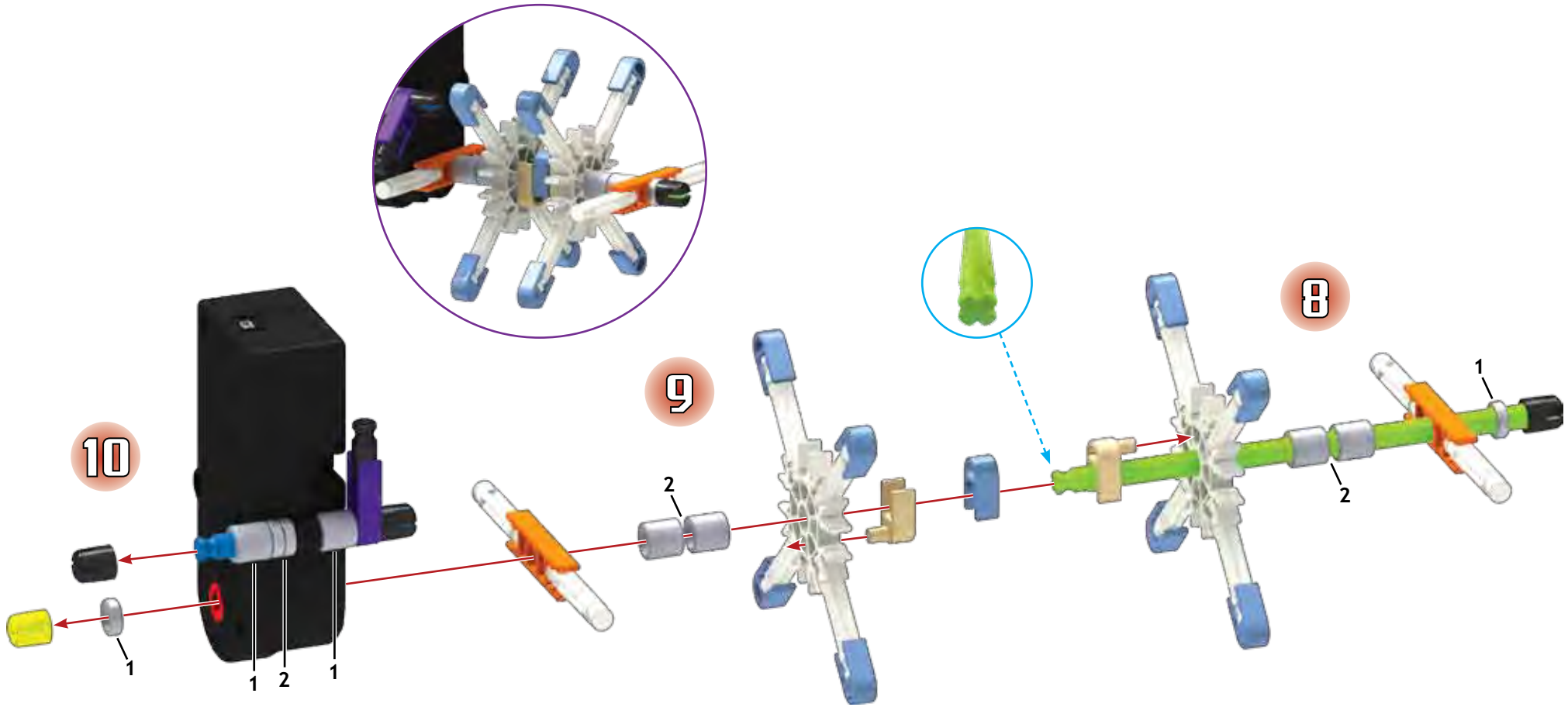
10
9
8
1
2
1
1
2
1
2
1

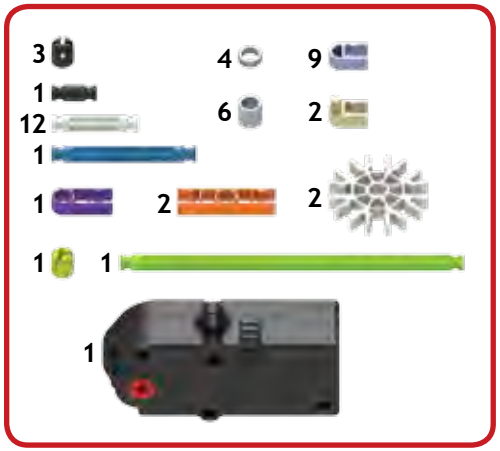
3
1
12
1
1
2
1
1
4
6
9
2
2
1

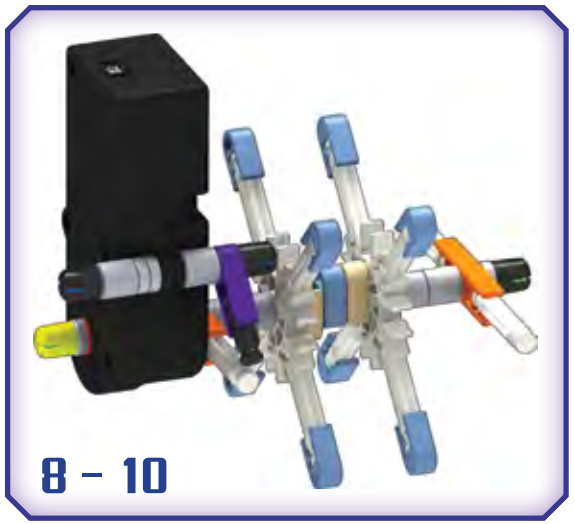
8 – 10

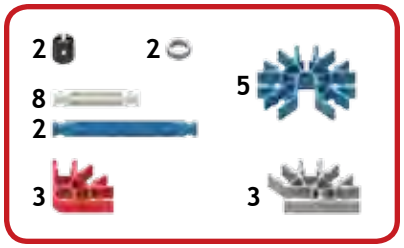
2
2
8
2
5
3
3

8 – 12

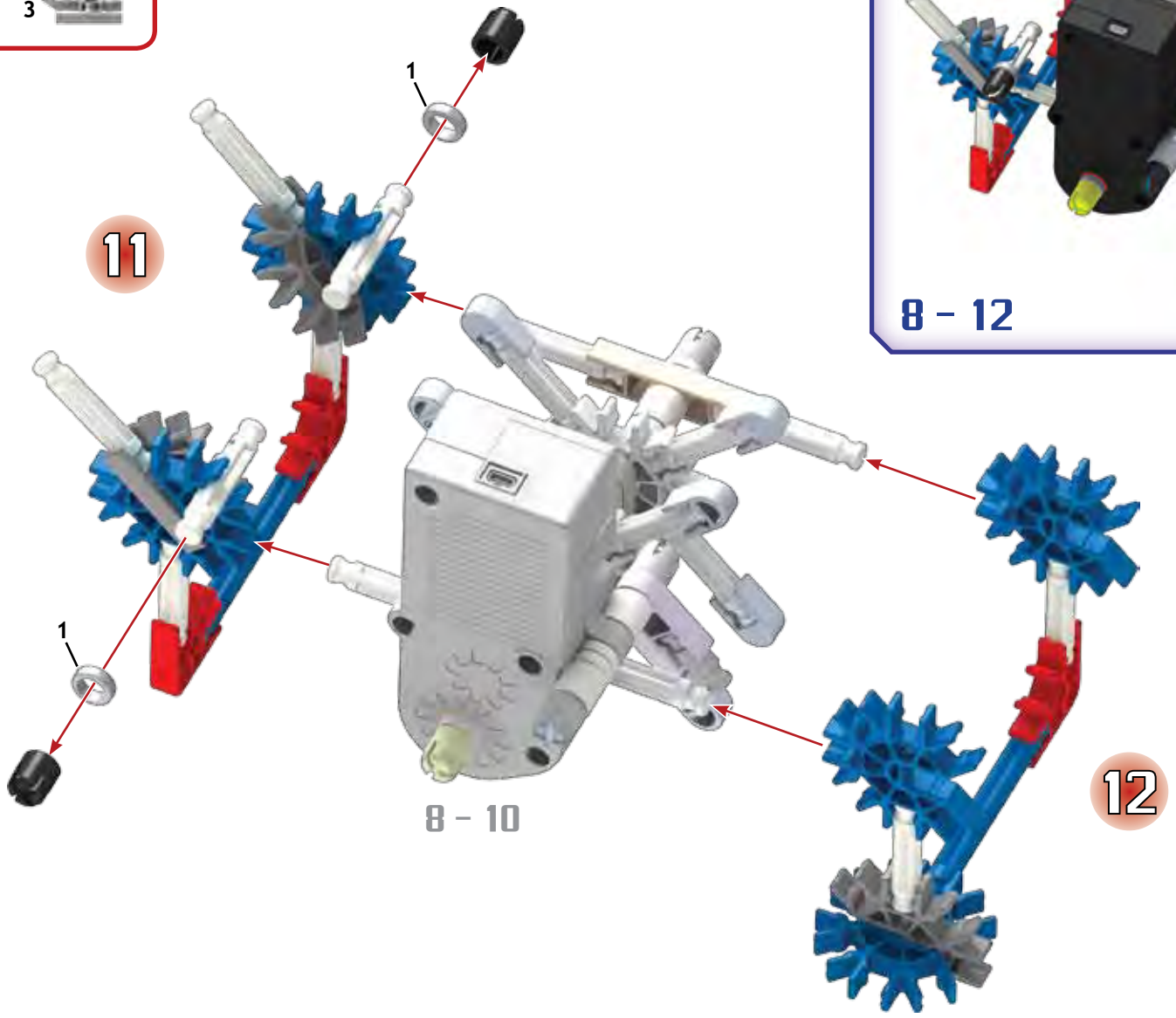
1
11
1
8 – 10
12

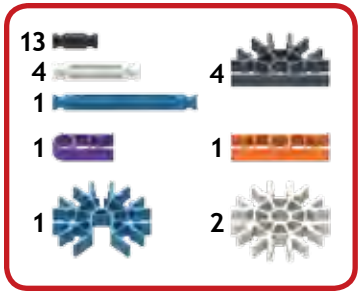
13
4
4
1
1
1
1
2

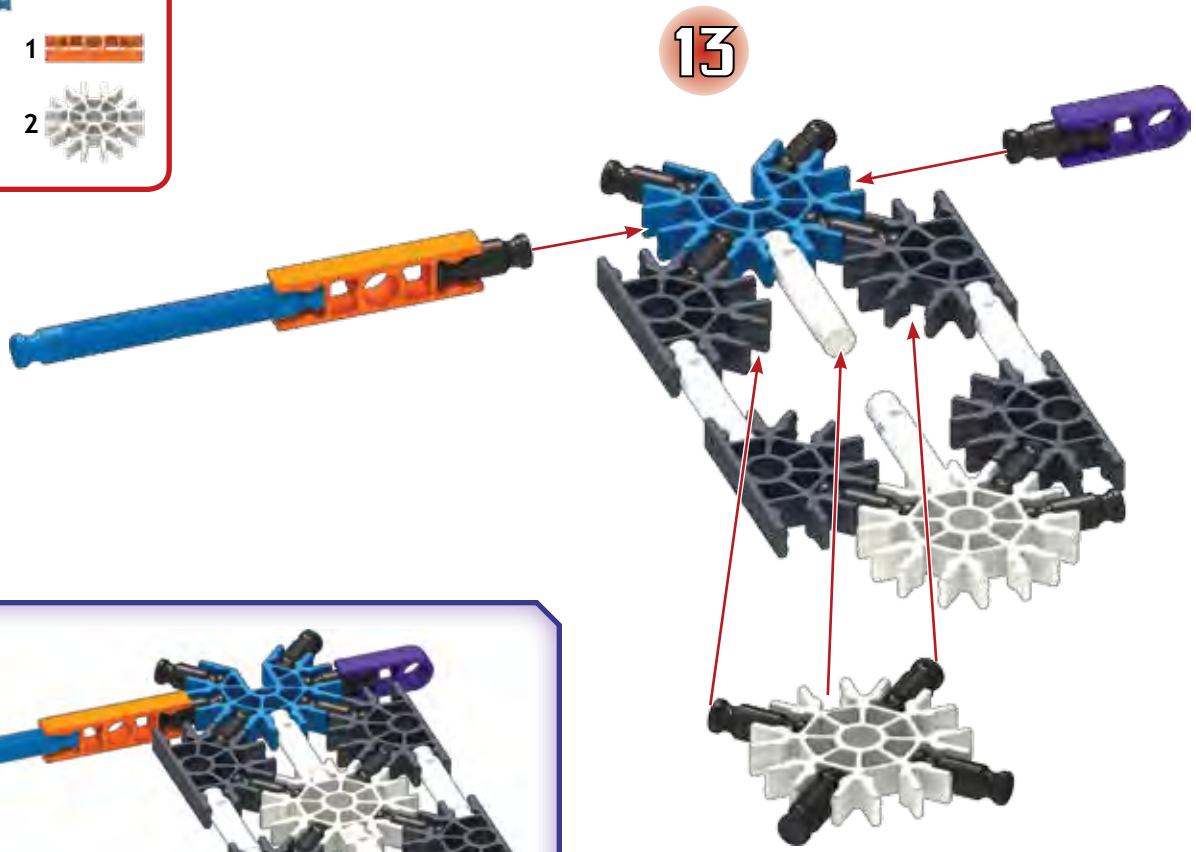
13

13

1
1
3
1
4
3
2
4
1
1
1
2

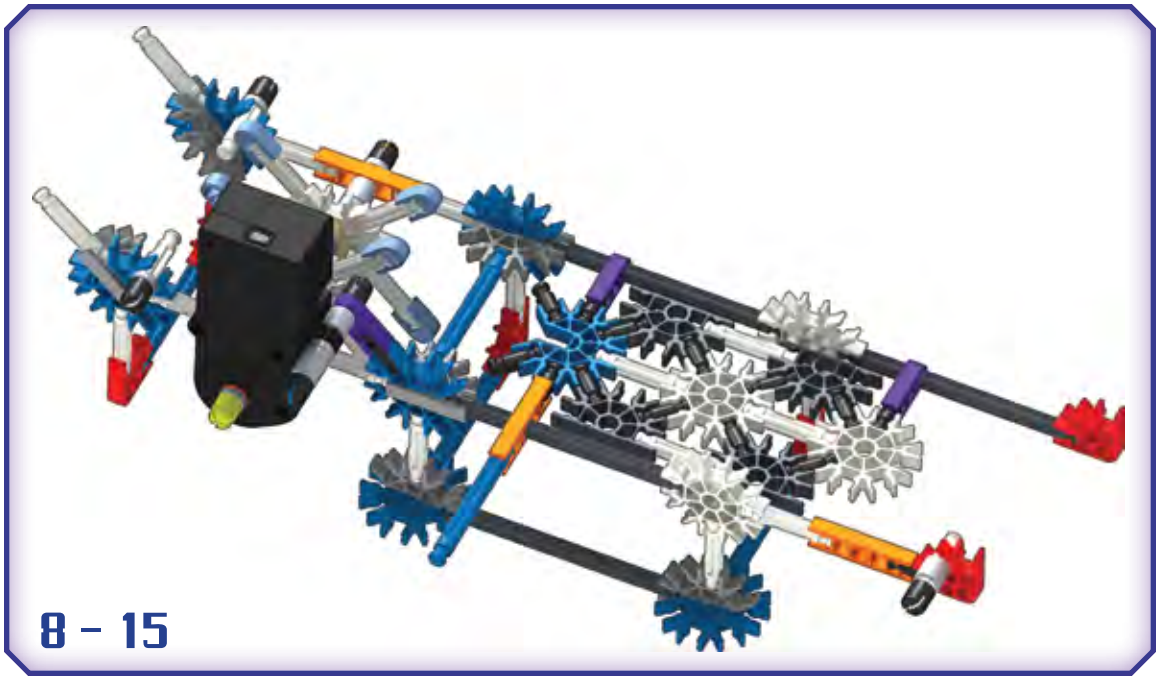
8 – 15

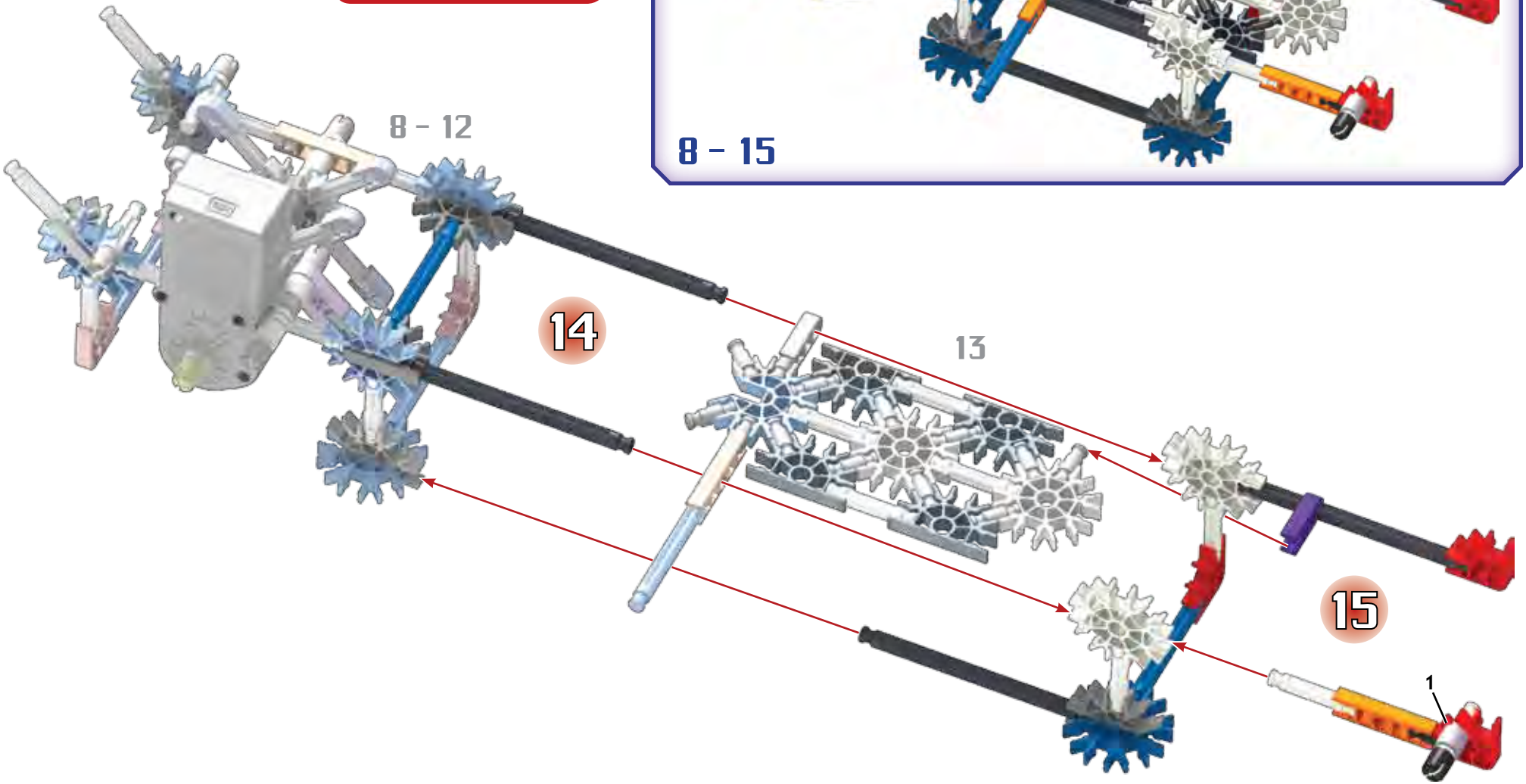
8 – 12
14
13
15
1

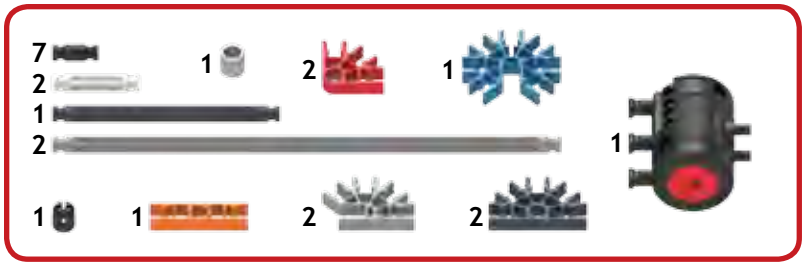
7
2
1
2
1
1
2
1
1
1
2
2

8 – 18

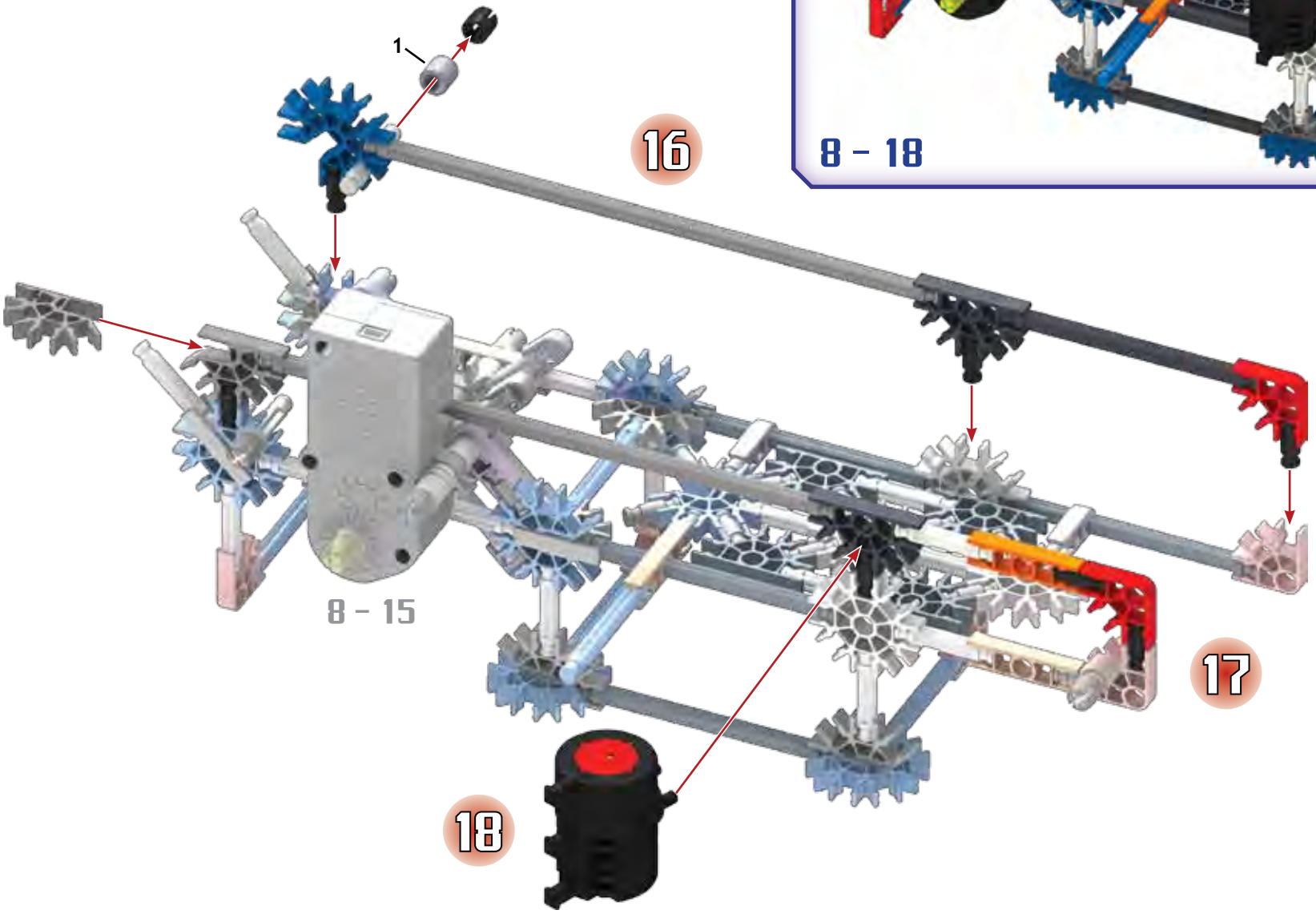
1
16
8 – 15
17
18

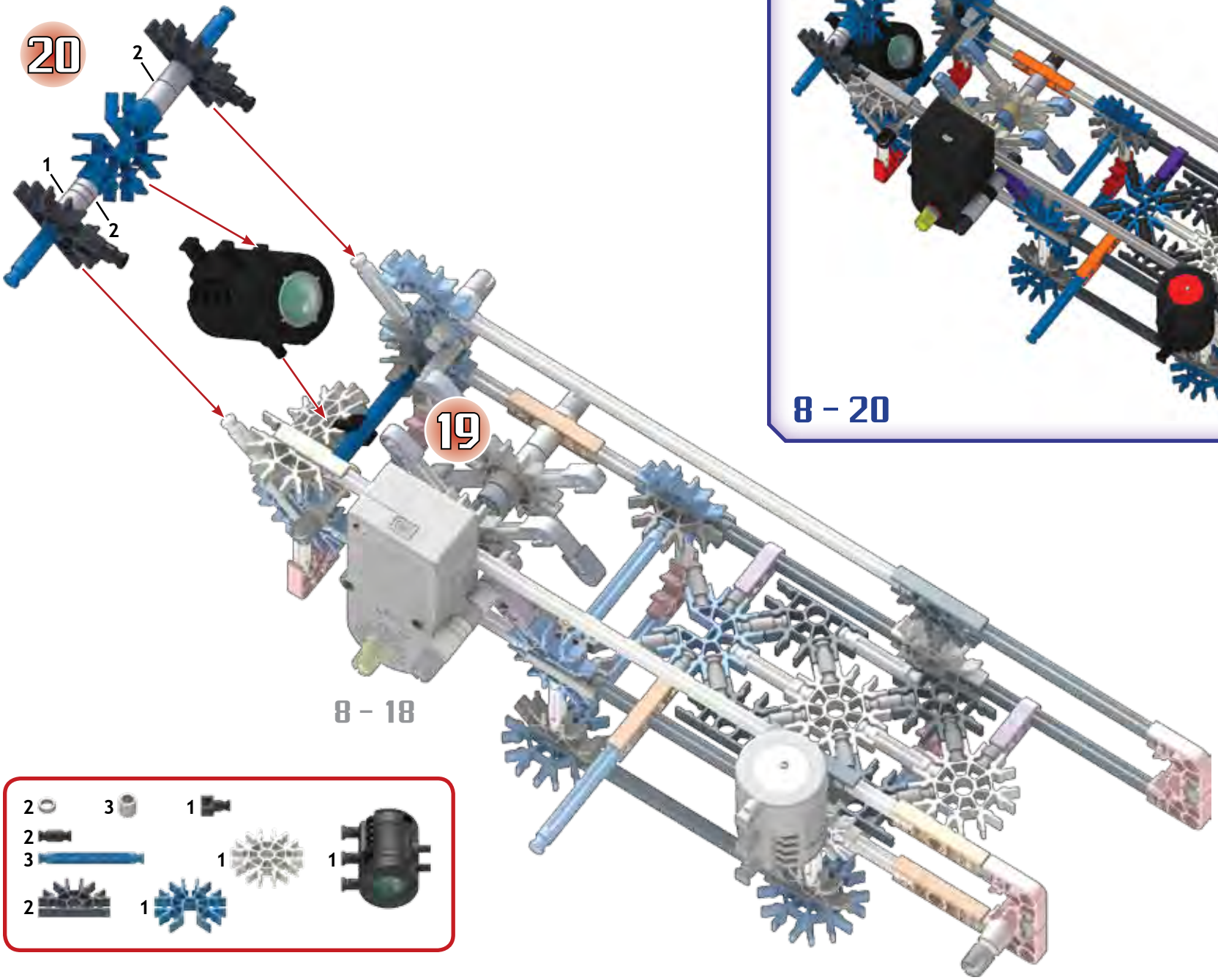
20
2
1
2
19
8 – 18

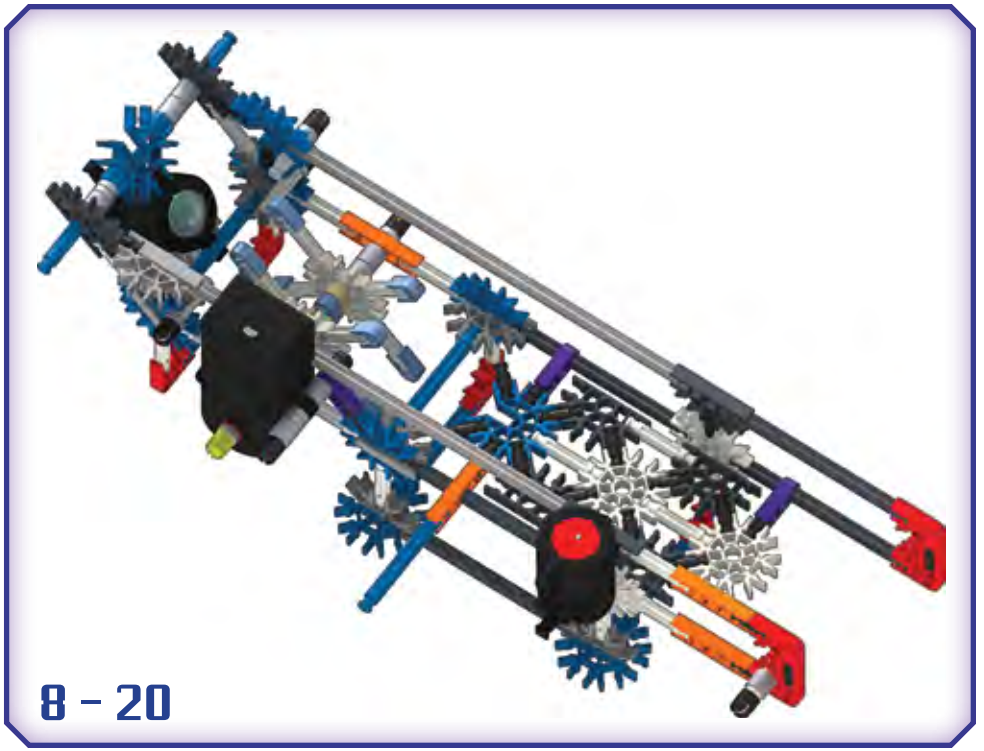
8 – 20

2
3
1
2
3
1
1
2
1

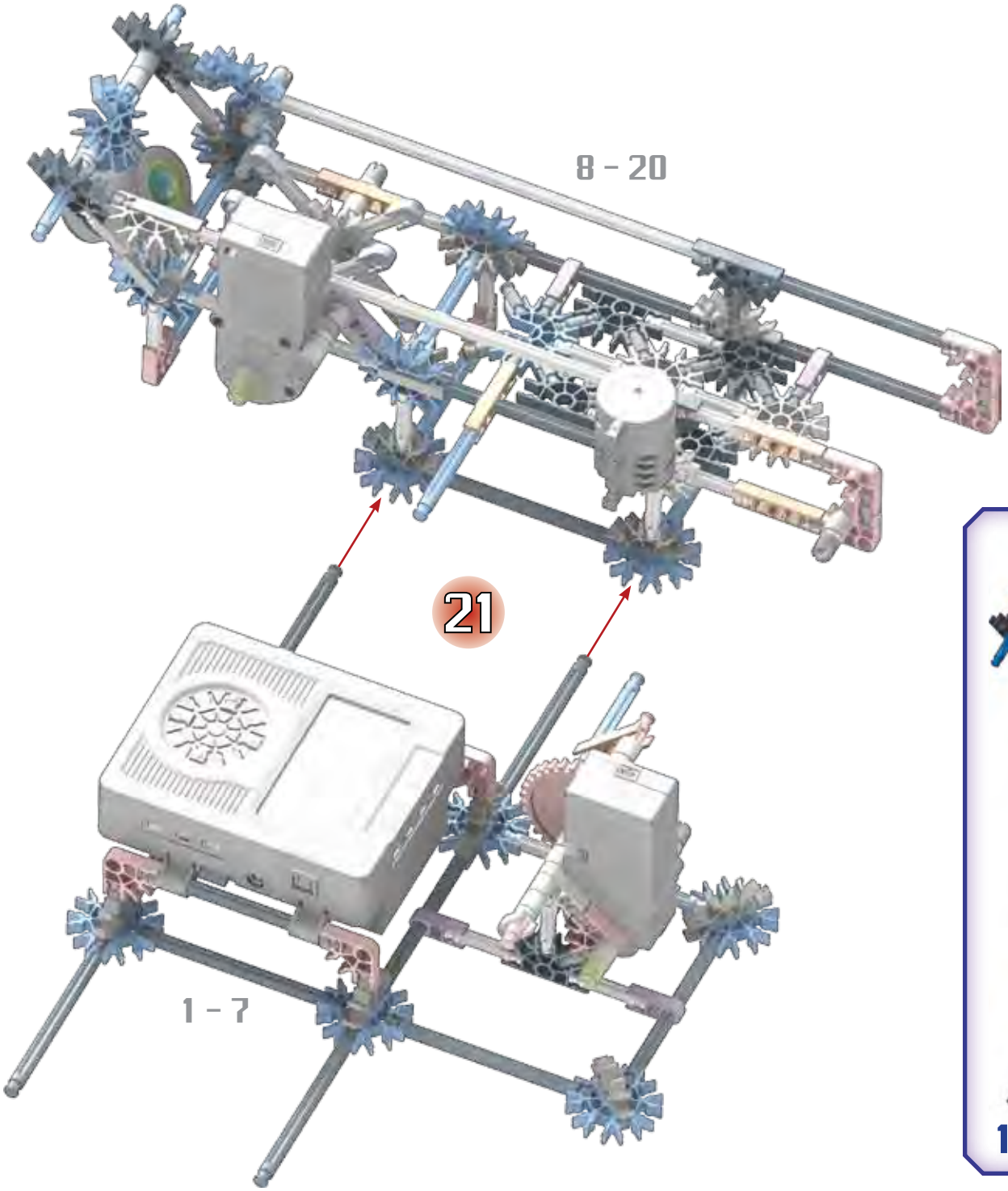
8 - 20
21
1 - 7

1 - 21

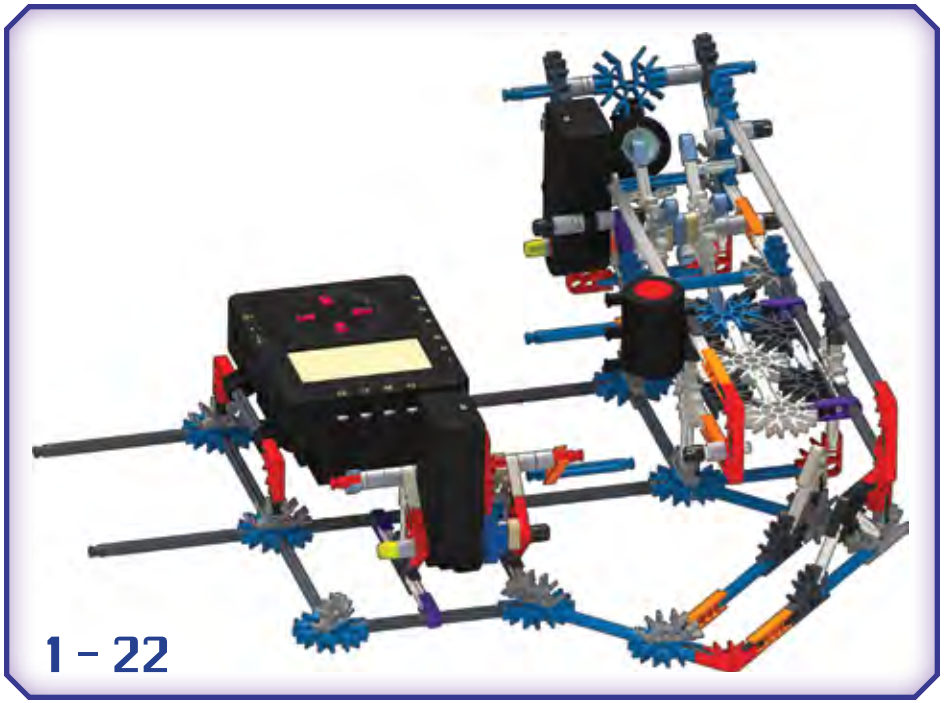

rotate model

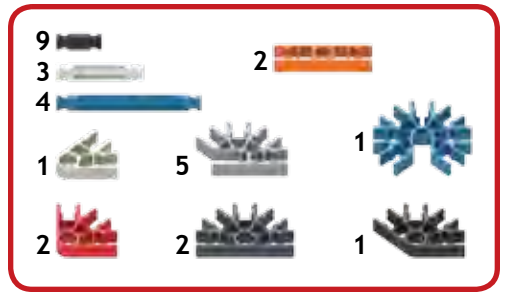

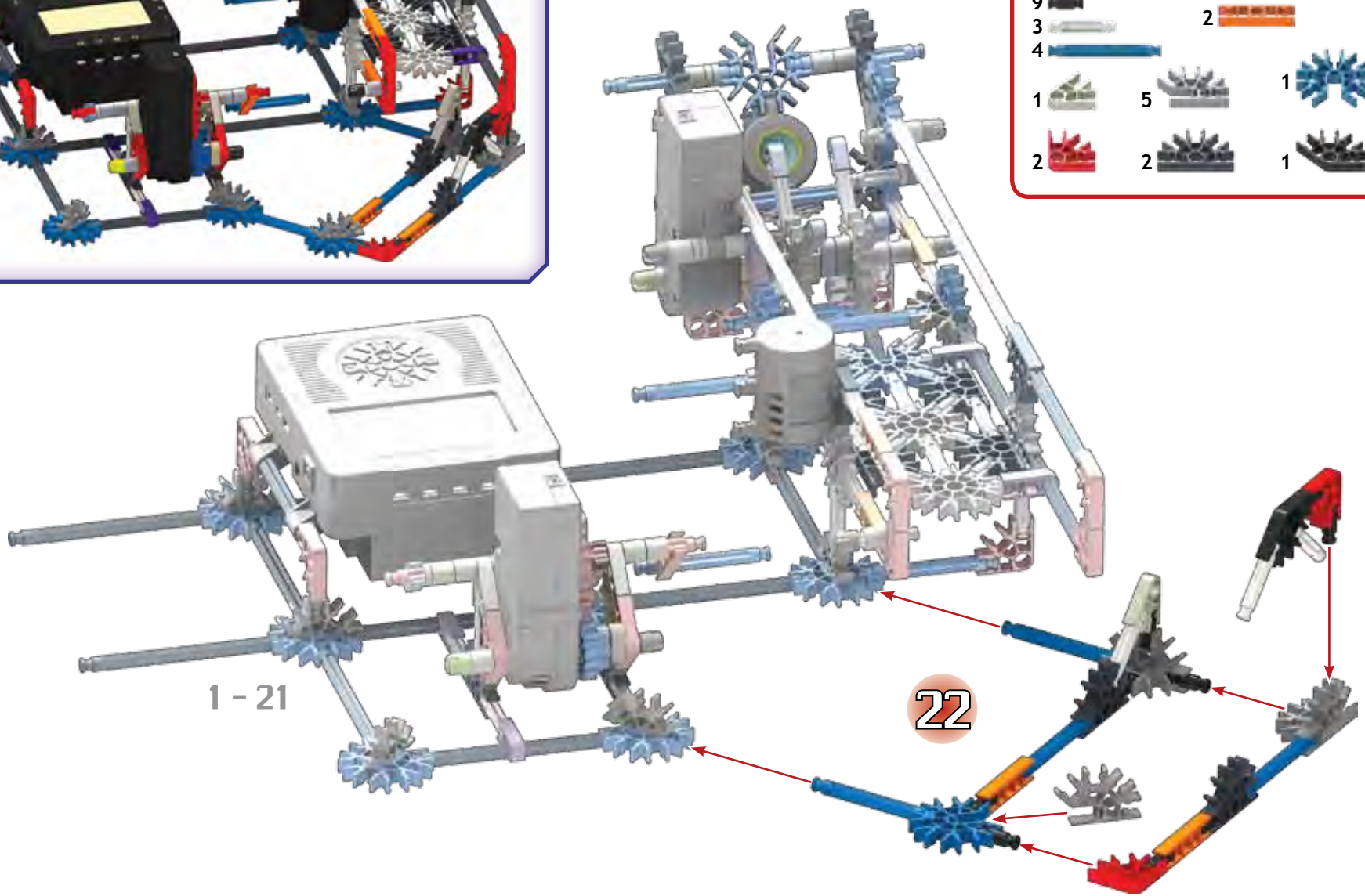

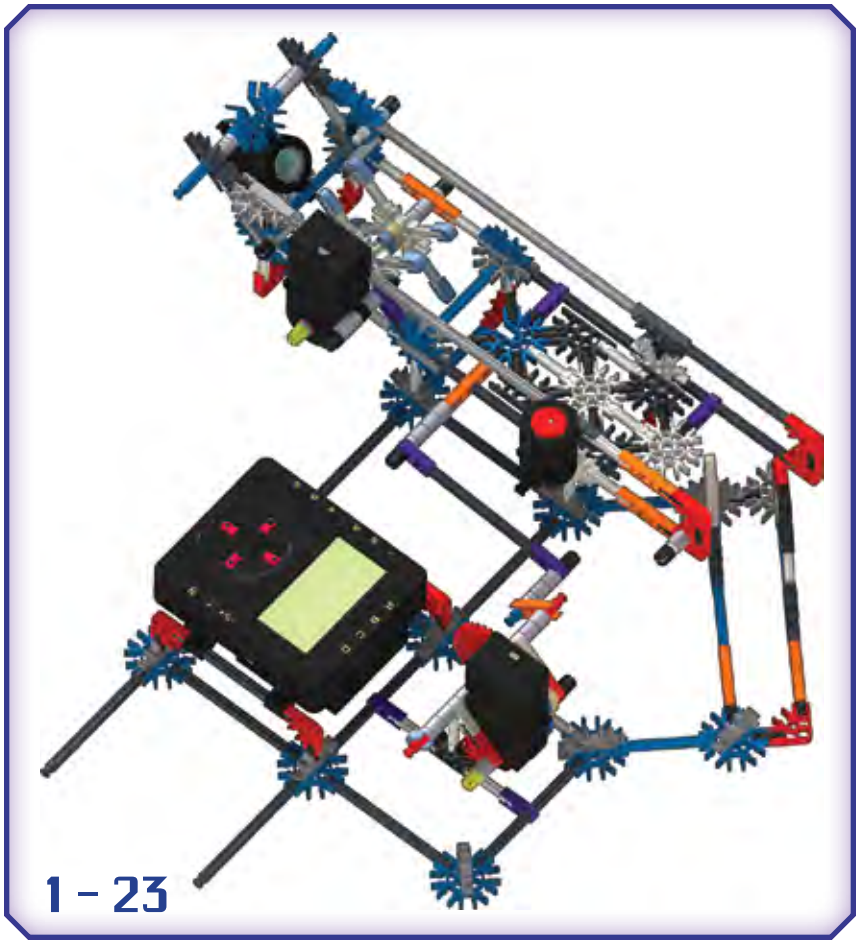
1 - 23

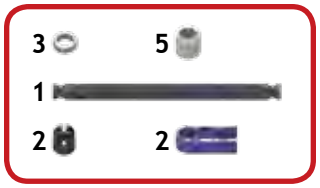
3
5
1
2
2

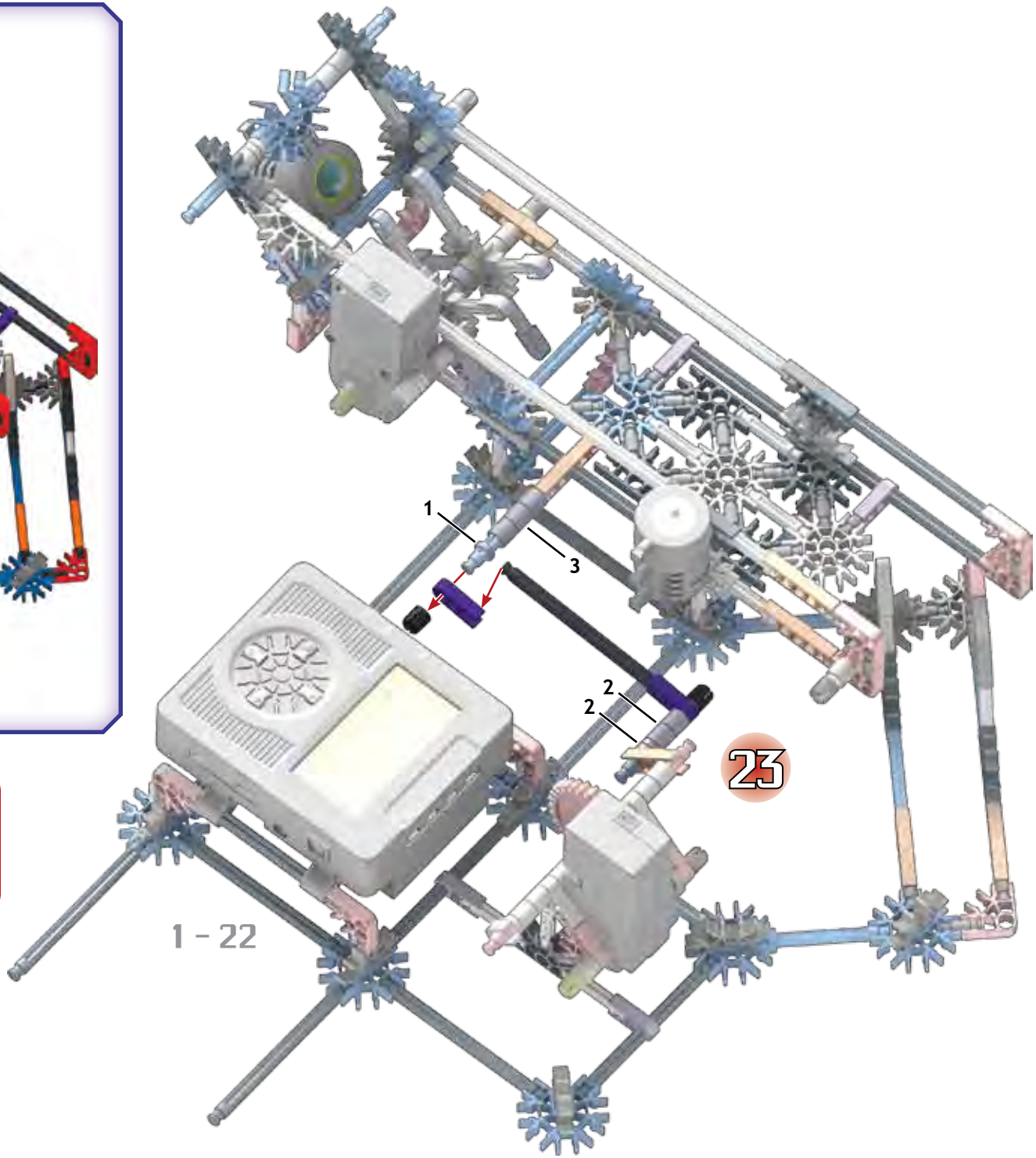
1
3
2
2
23
1 - 22

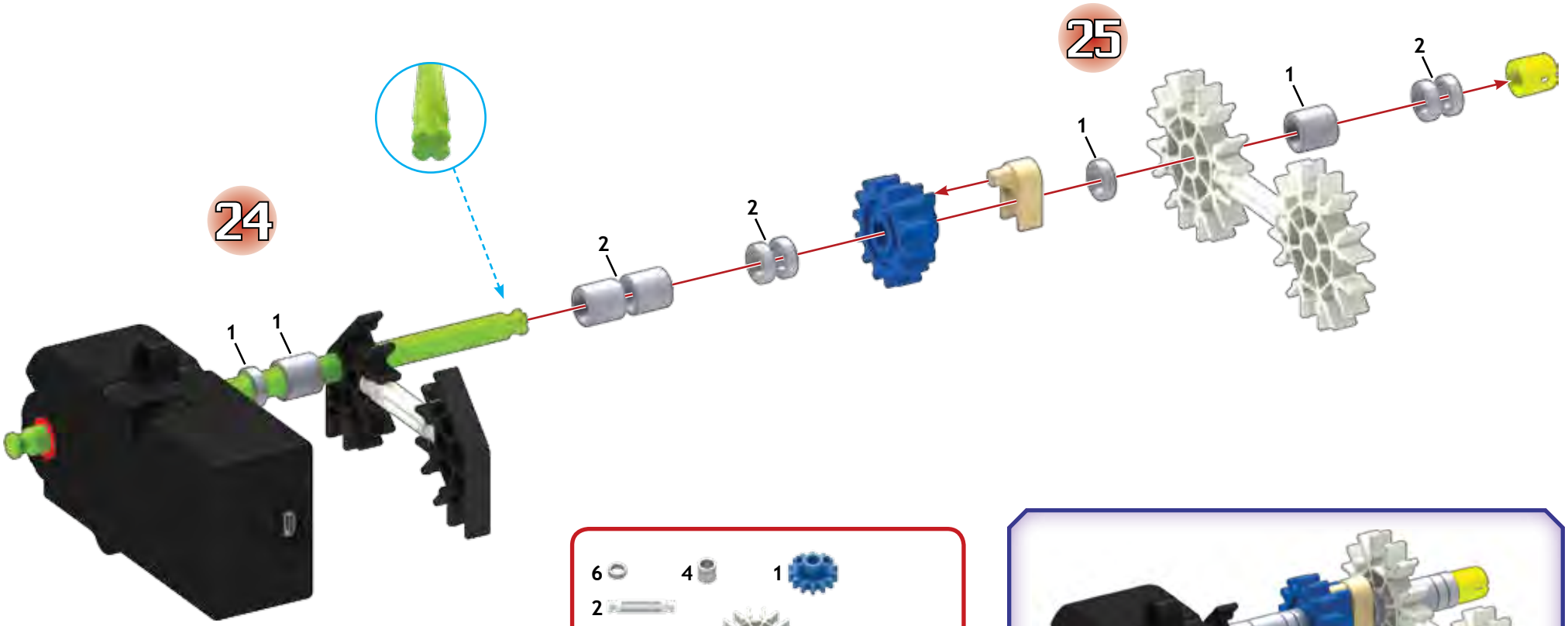
24
25
1
1
2
2
1
1
2

6
4
1
2
2
2
1
1
1

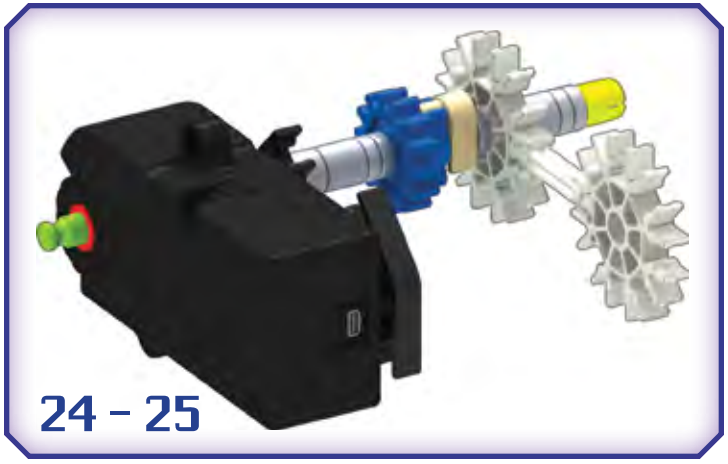
24 – 25

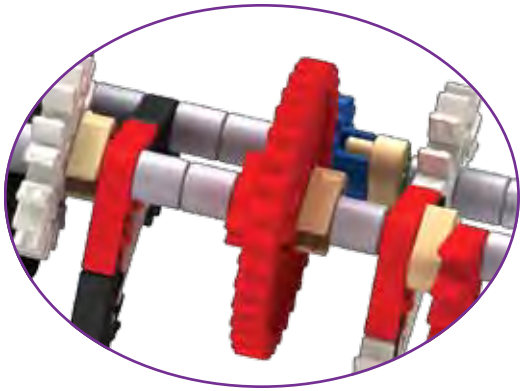

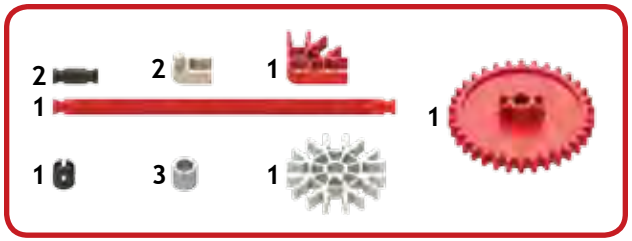
2
2
1
1
1
1
3
1

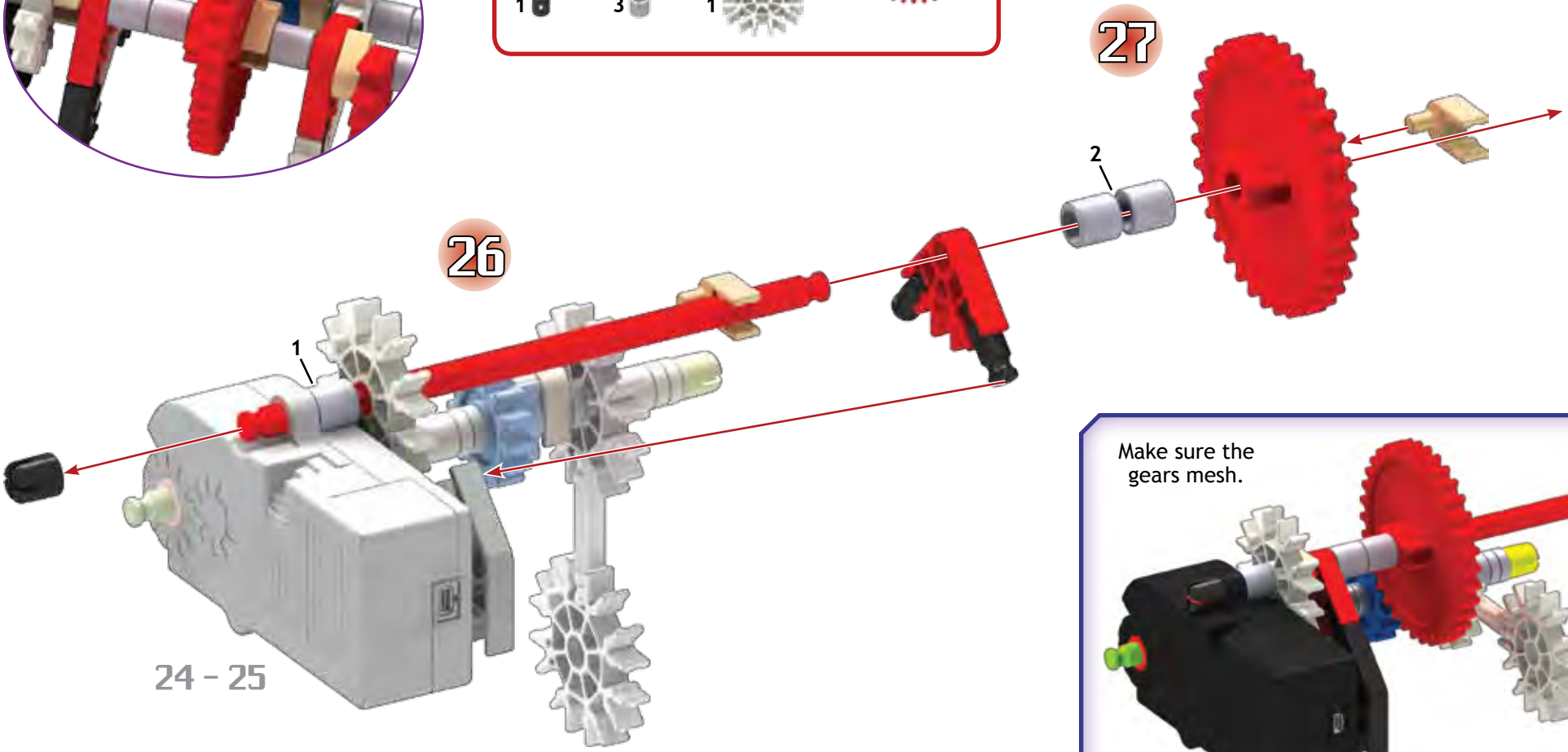
27
2
26
1
24 – 25

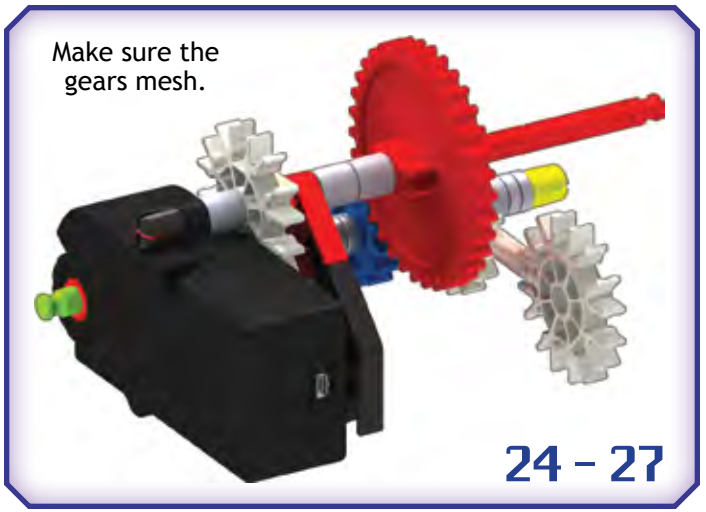
Make sure the gears mesh.
24 – 27

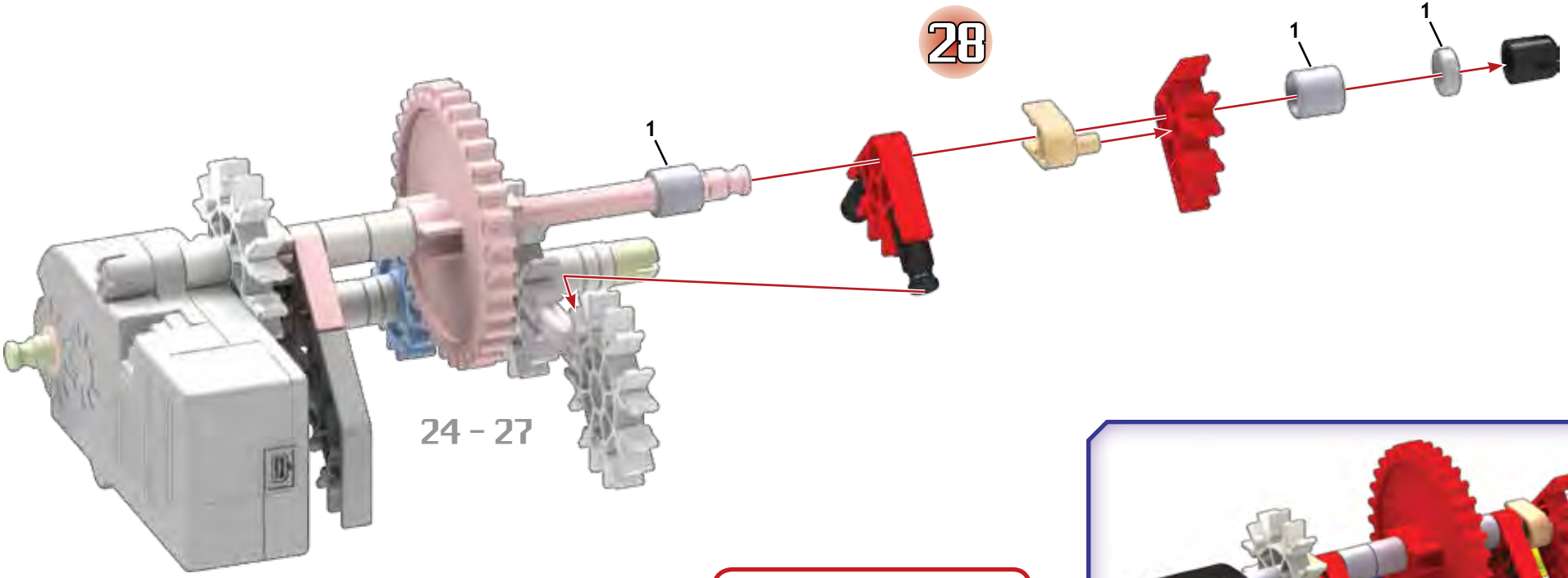
28
1
1
1
24 - 27

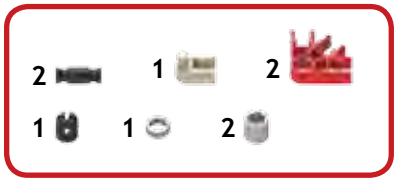
2
1
2
1
1
2

24 - 28

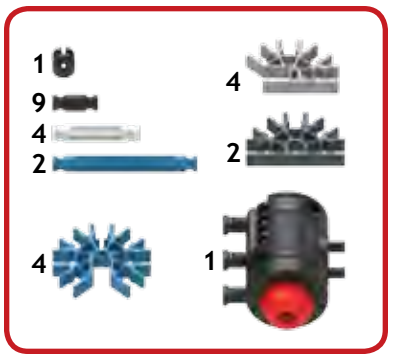

31

24 - 28

30

29

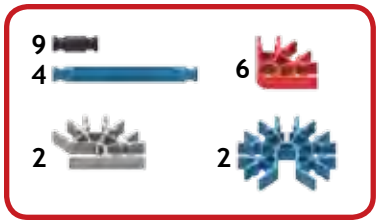
9
4
6
2
2

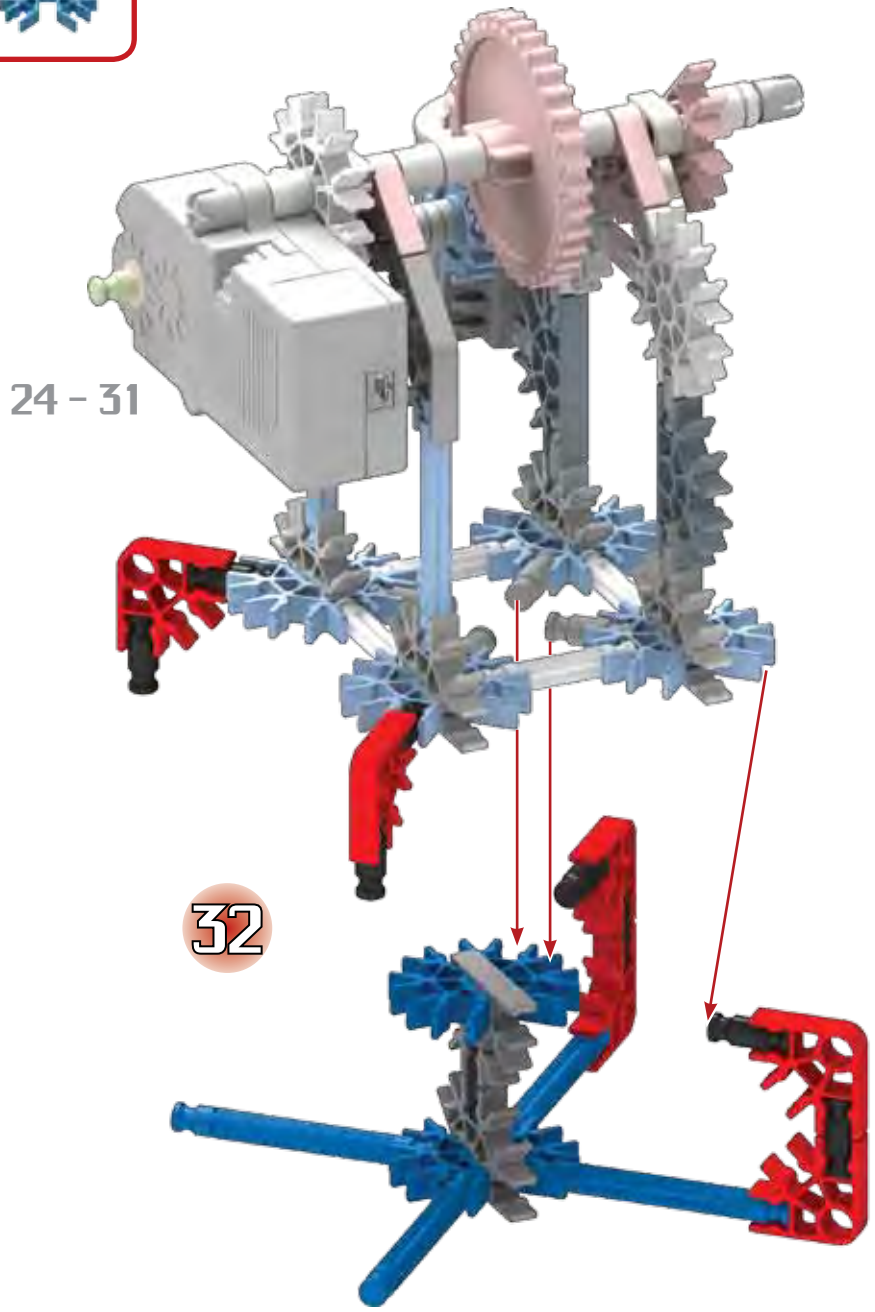
24 – 31
32

24 – 32

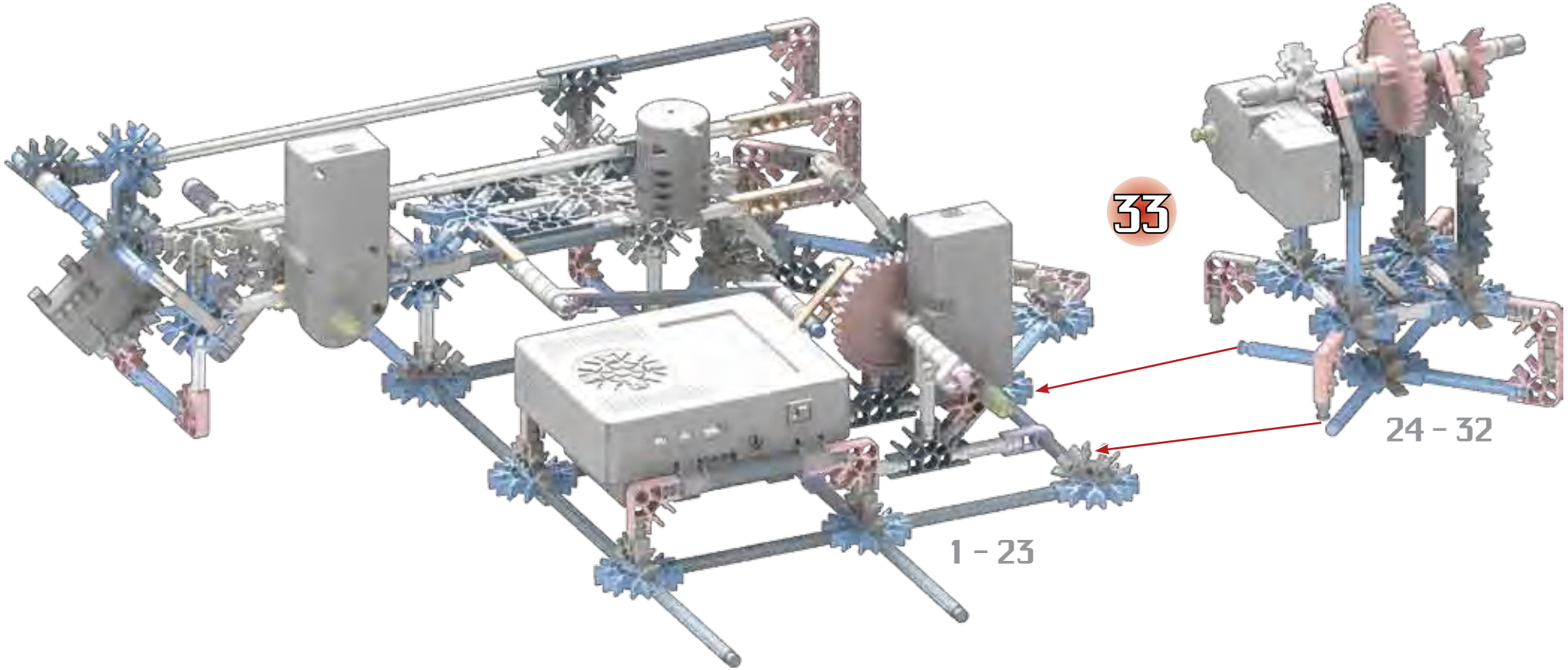
33
24 - 32
1 - 23

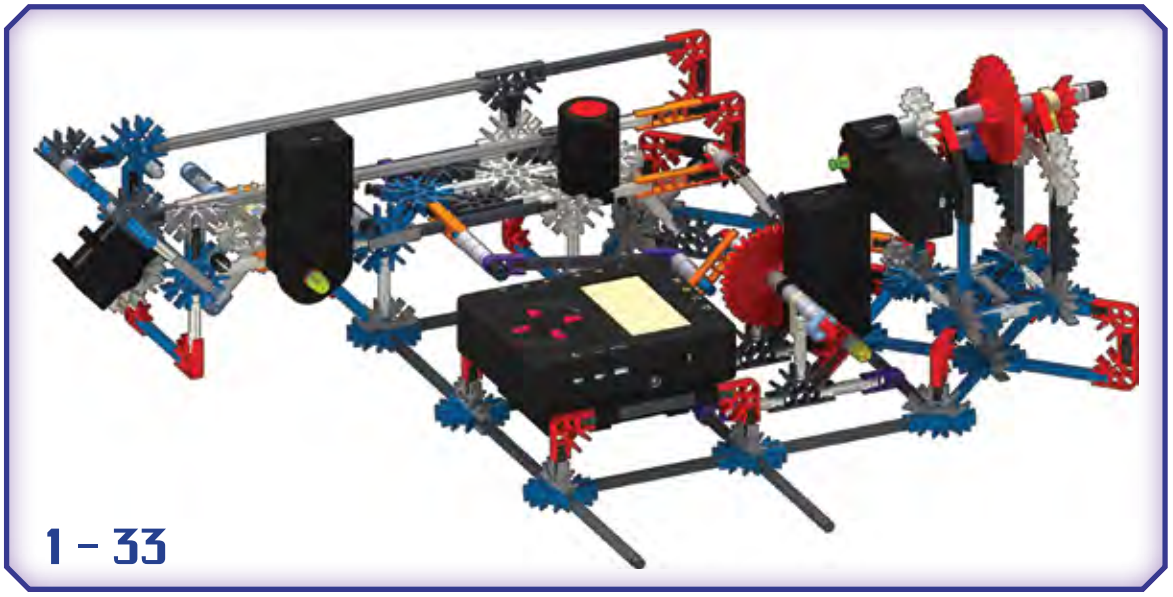
1 - 33

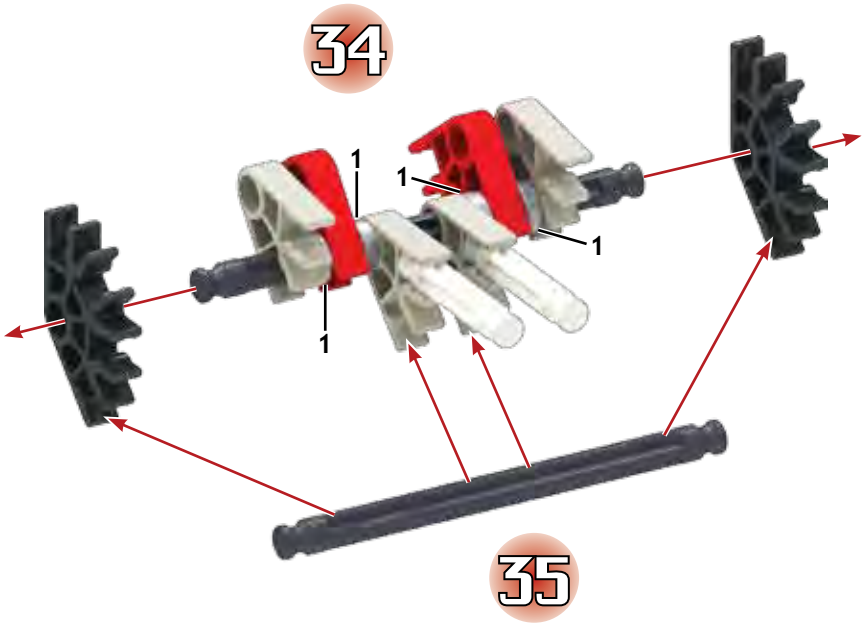
34
1
1
1
1
35

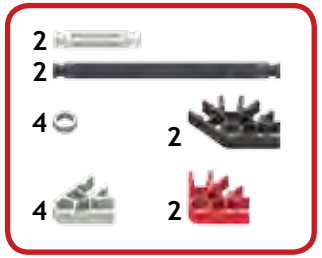
2
2
4
2
4
2

34 - 35

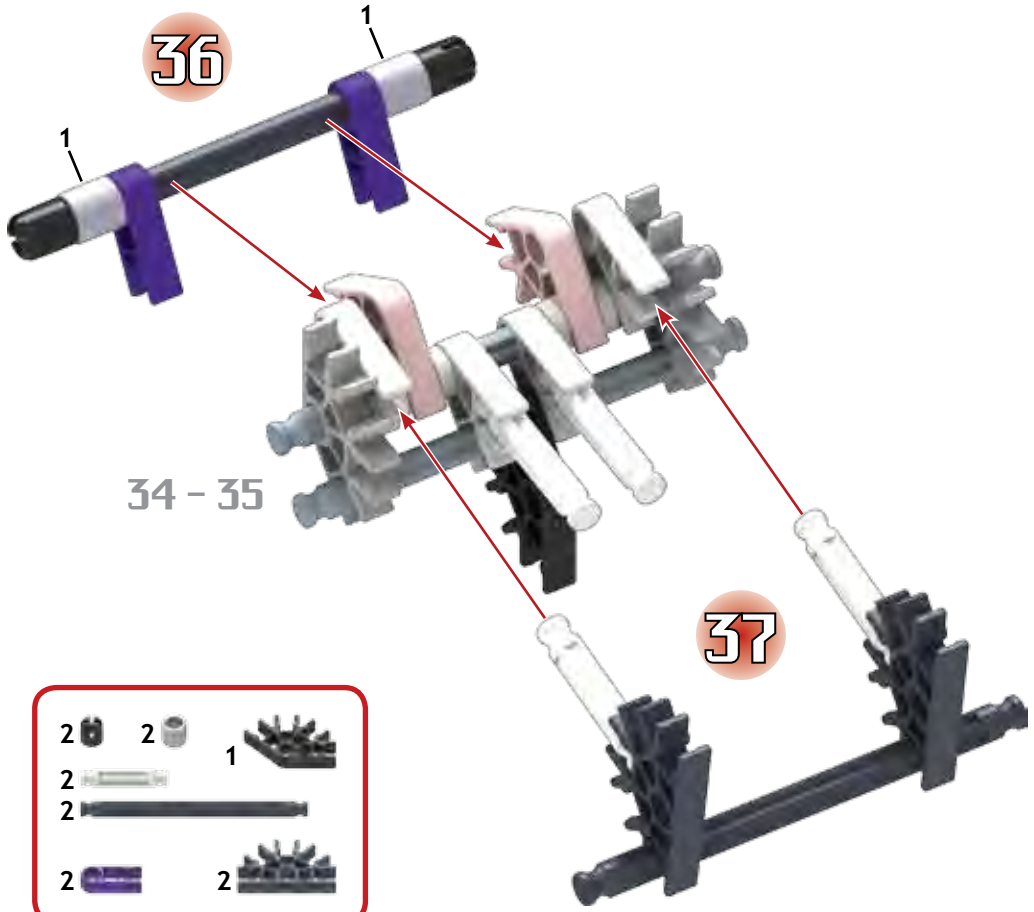
36
1
1
34 - 35
37

2
2
1
2
2
2
2

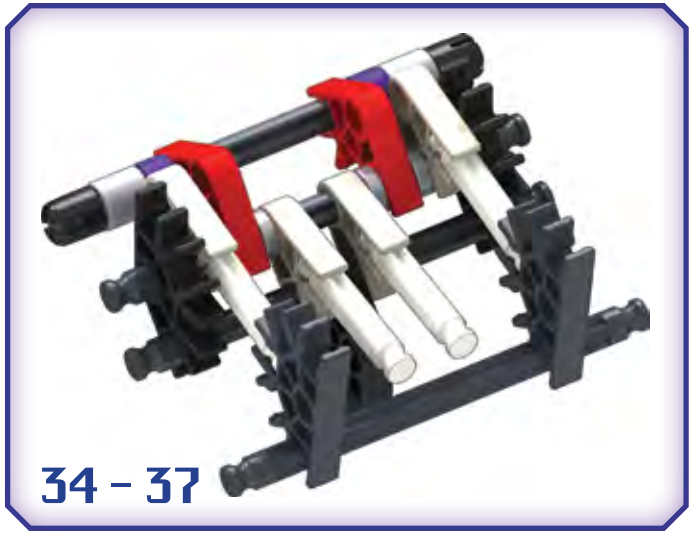
34 - 37

2
1
2
2
3
3
2
2

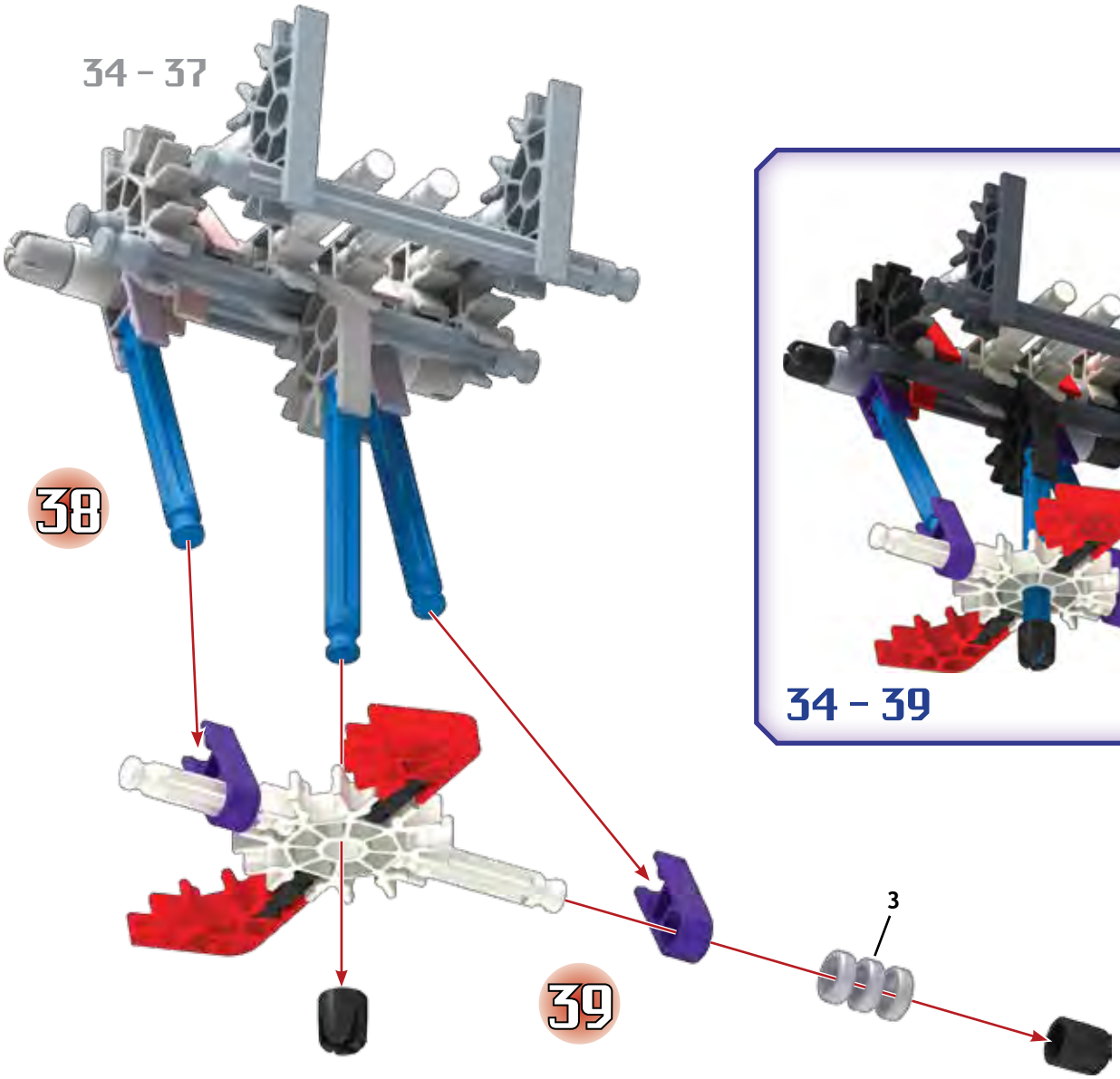
34 - 37
38
39
3

34 - 39

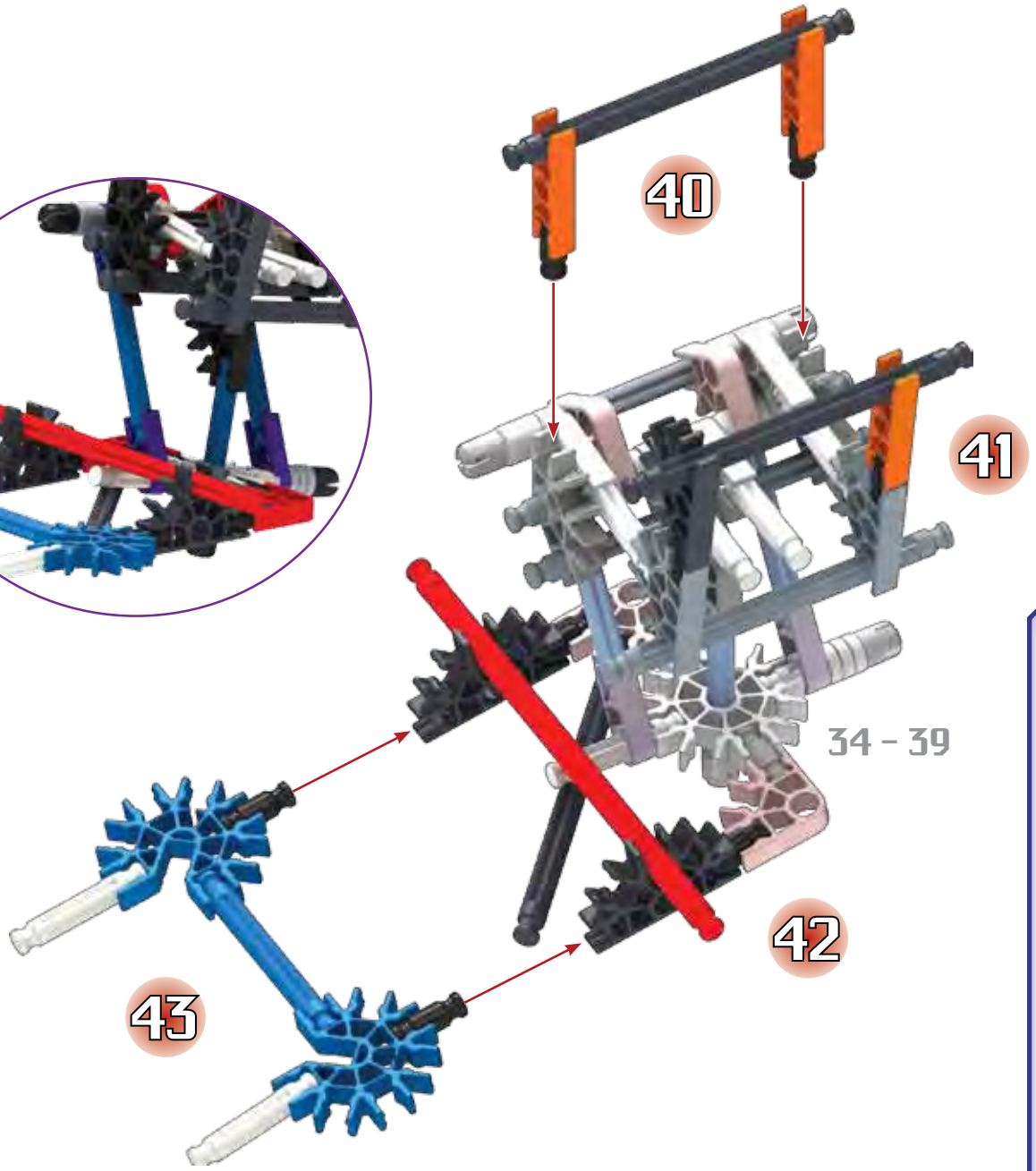
40
41
34 - 39
42
43

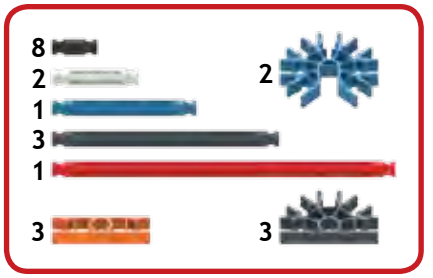
8
2
1
3
1
3
2
3

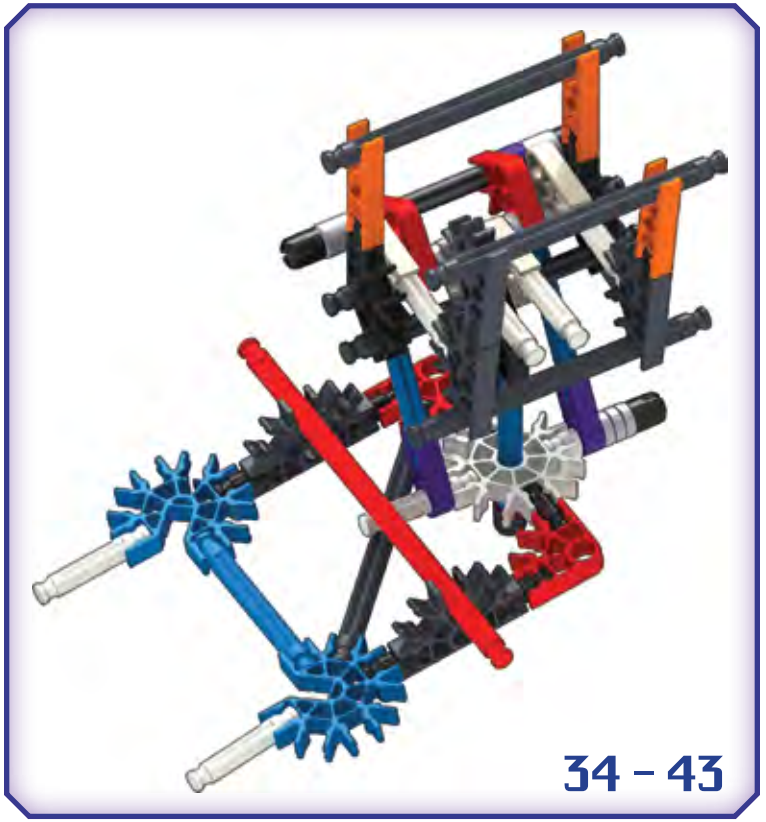
34 - 43

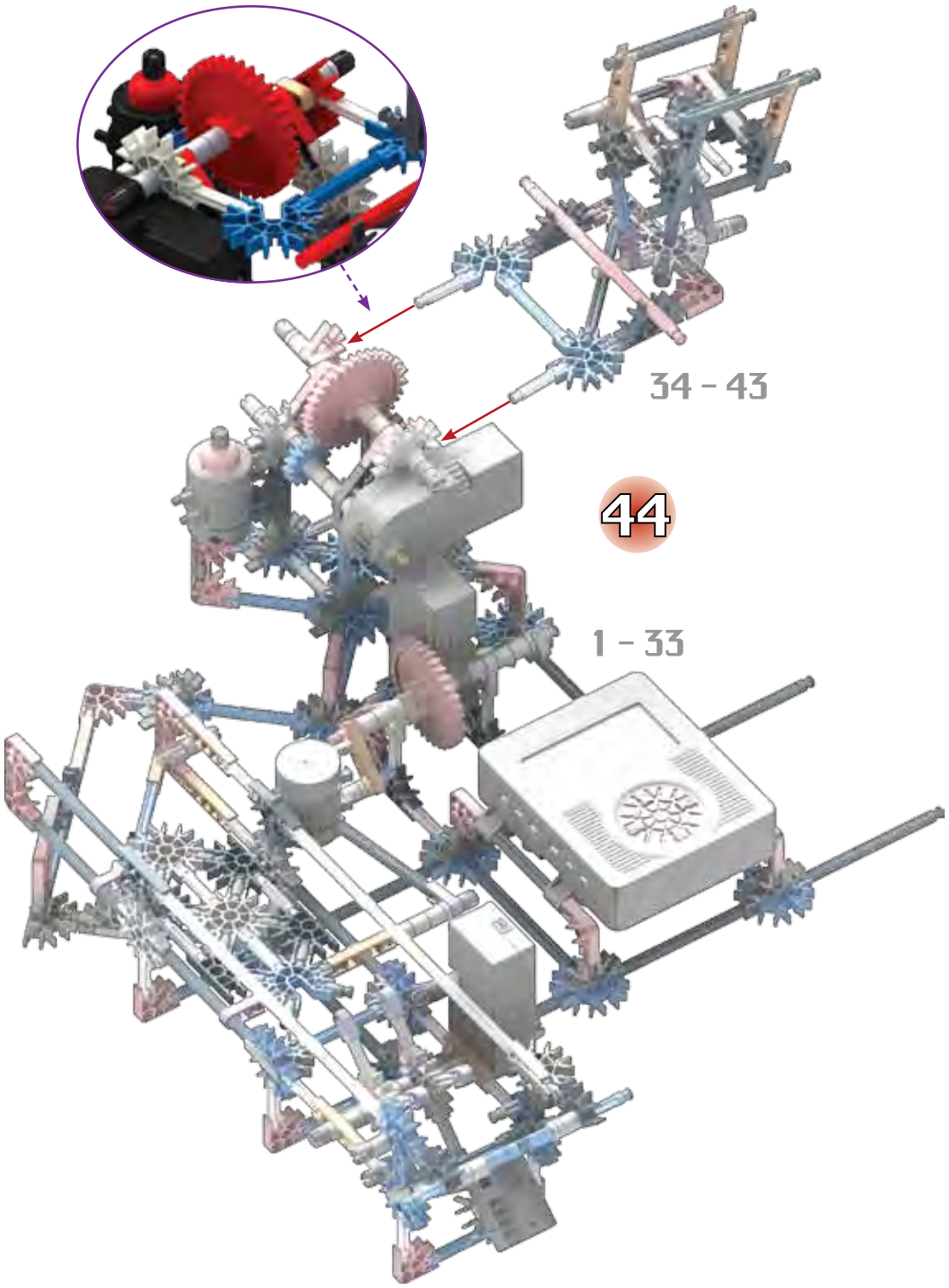
34 - 43
44
1 - 33

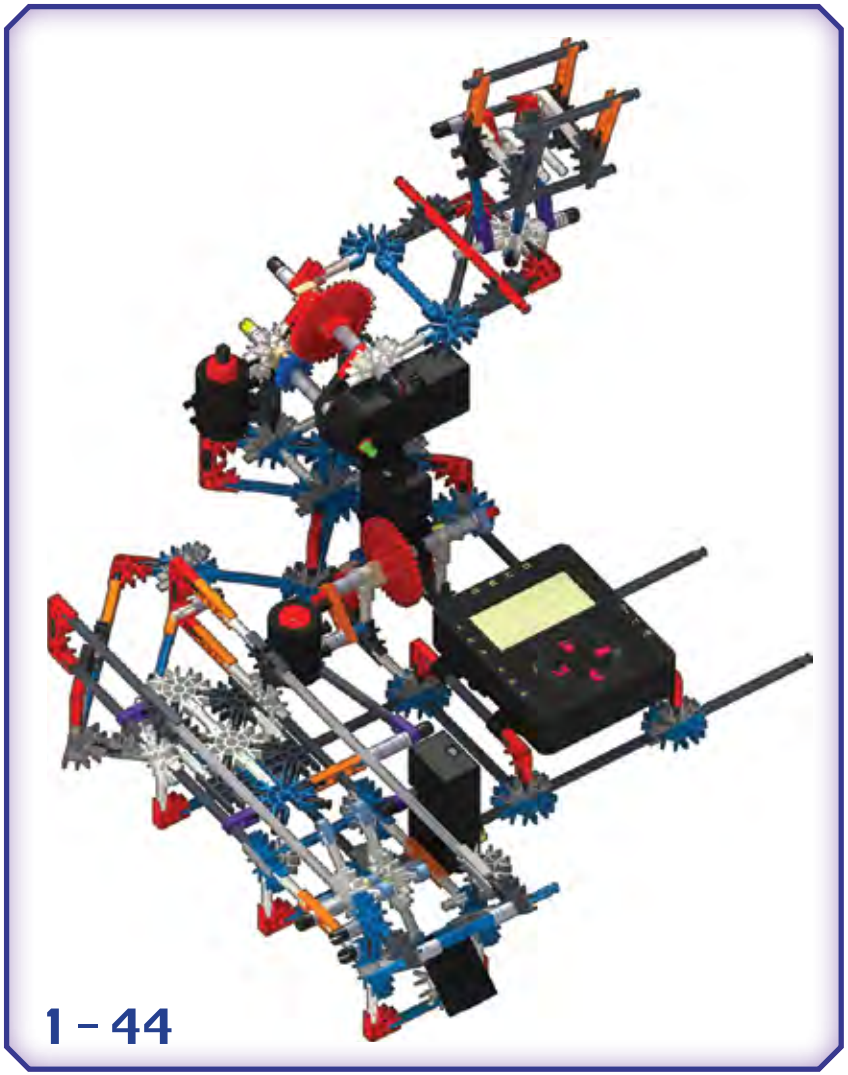
1 - 44

45 – 46

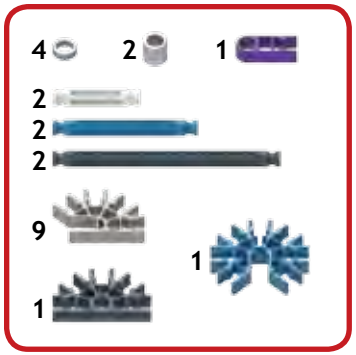
4
2
1
2
2
2
9
1
1

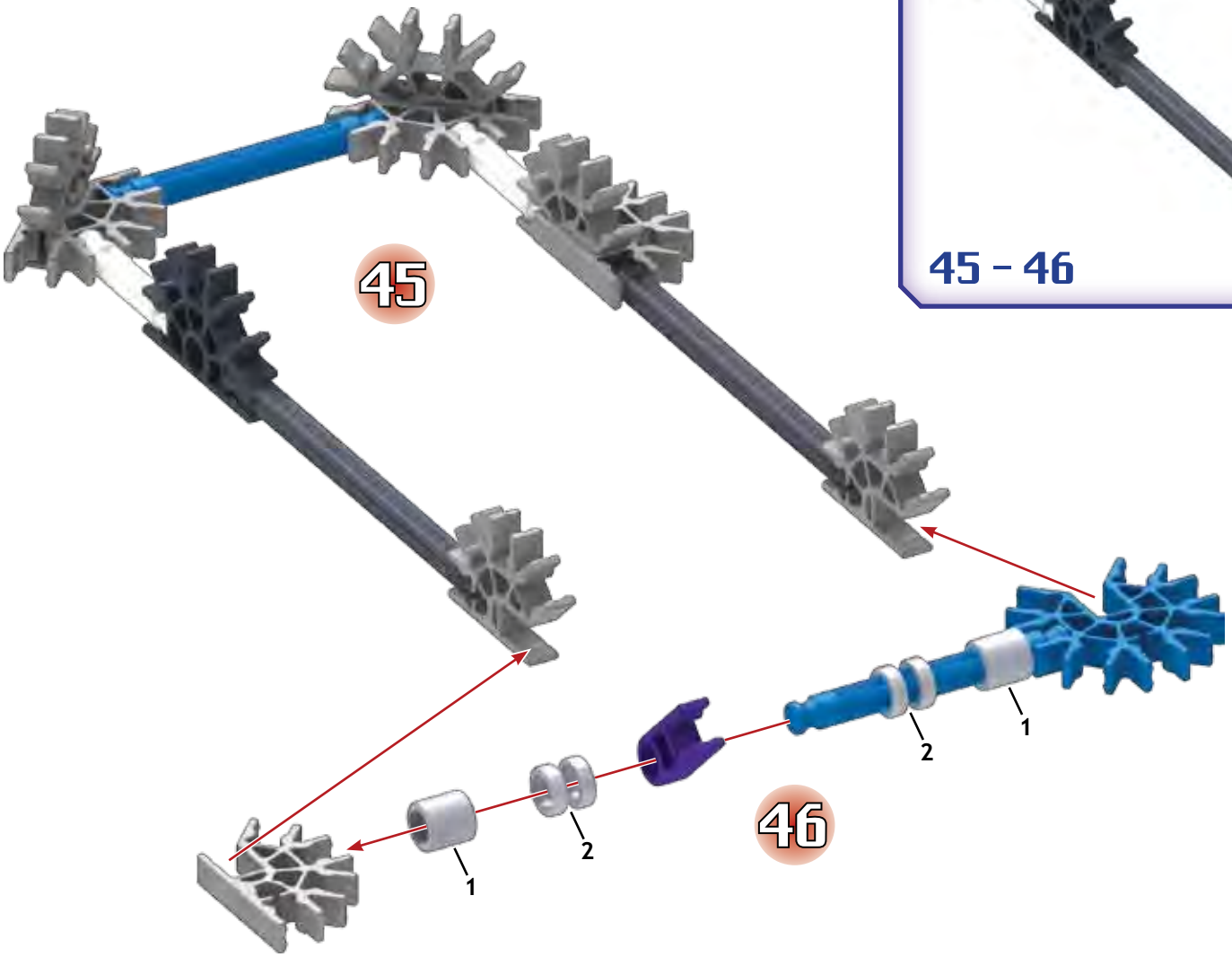
45
46
1
2
2
1
1
2

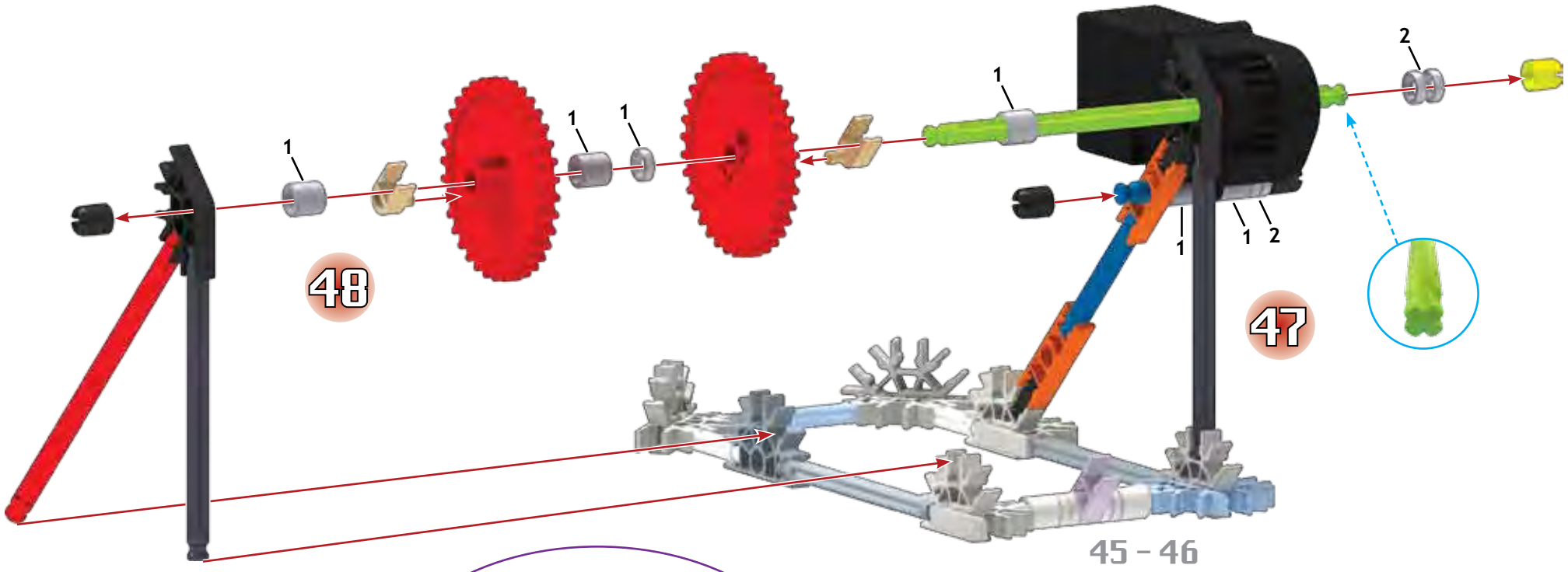

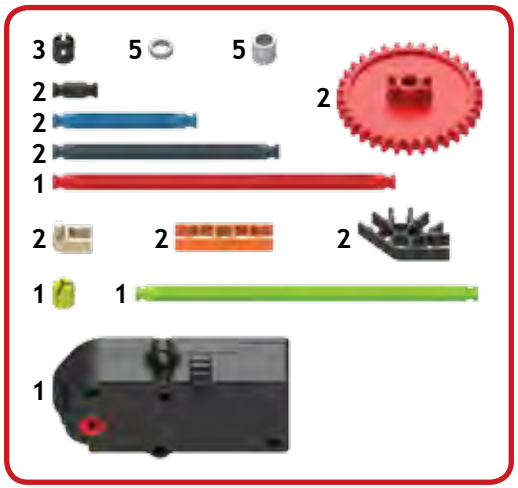

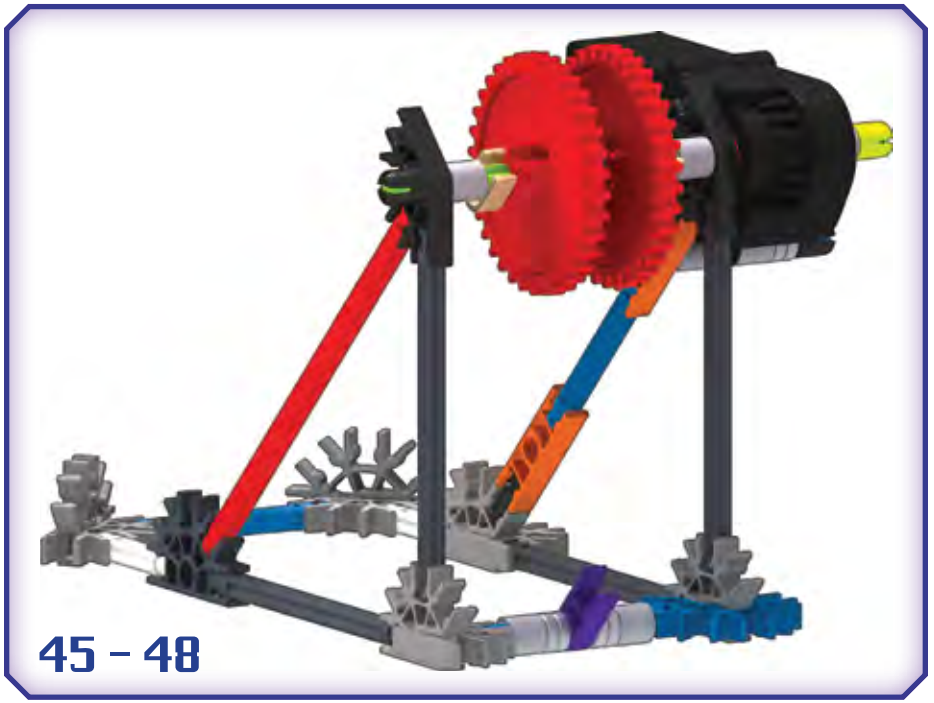

K'NEX Education

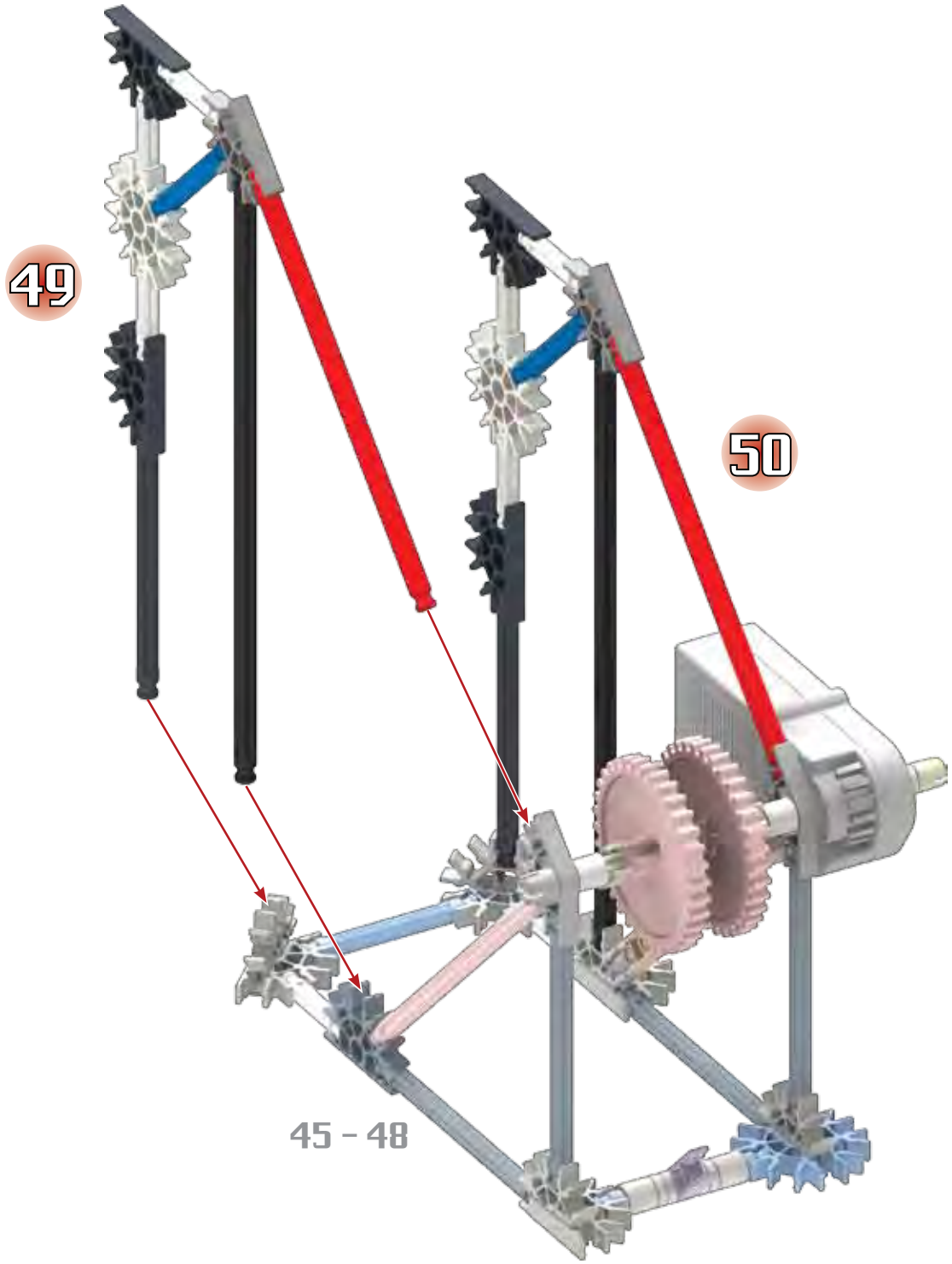
49
50
45 – 48

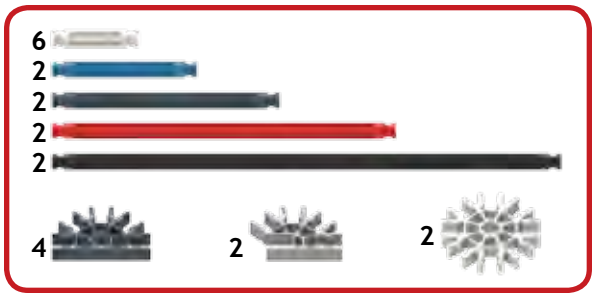
6
2
2
2
2
4
2
2

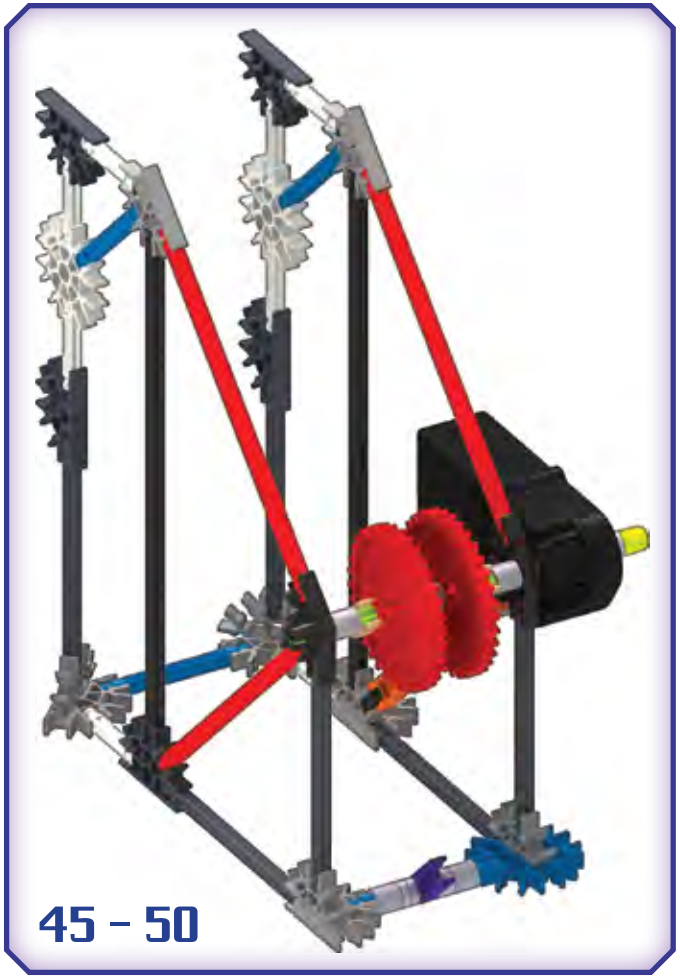
45 – 50

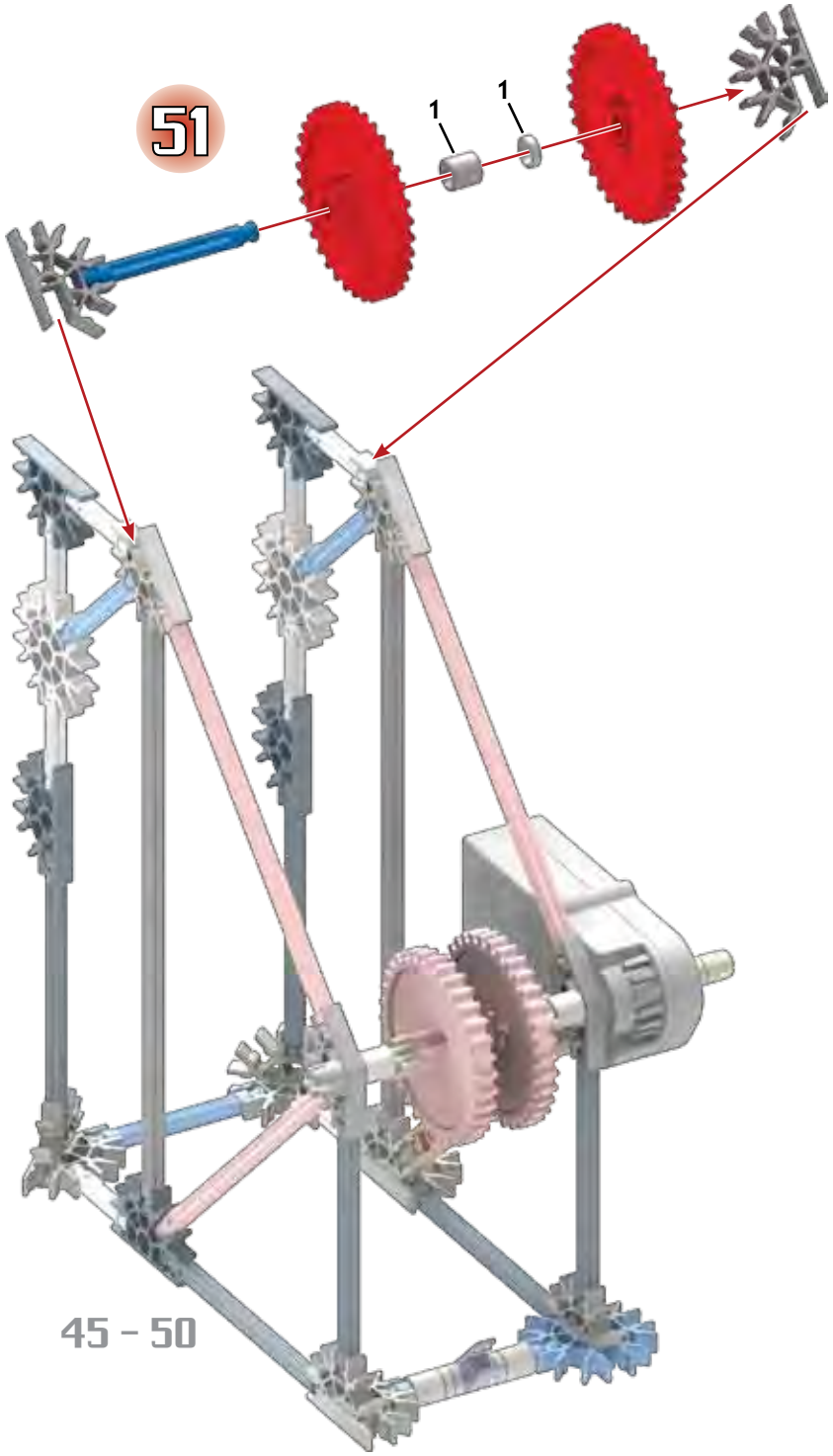
51
1
1
45 – 50

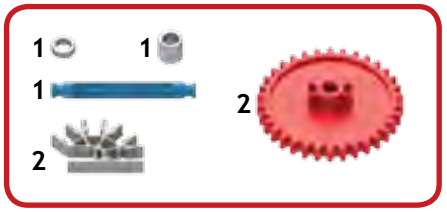
1
1
1
2
2

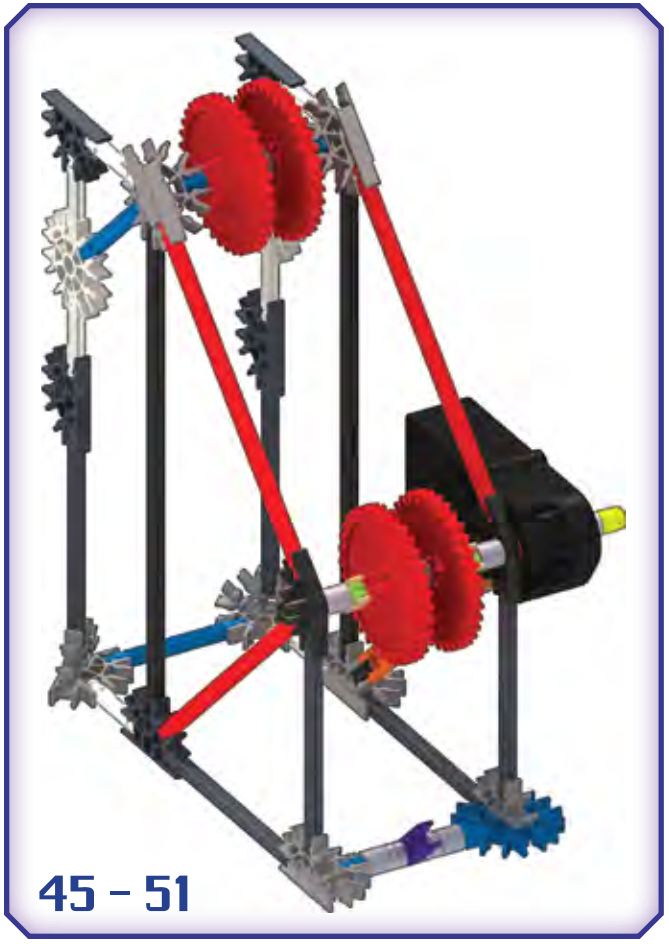
45 – 51

IMPORTANT: Attach all the chain links in the same direction.

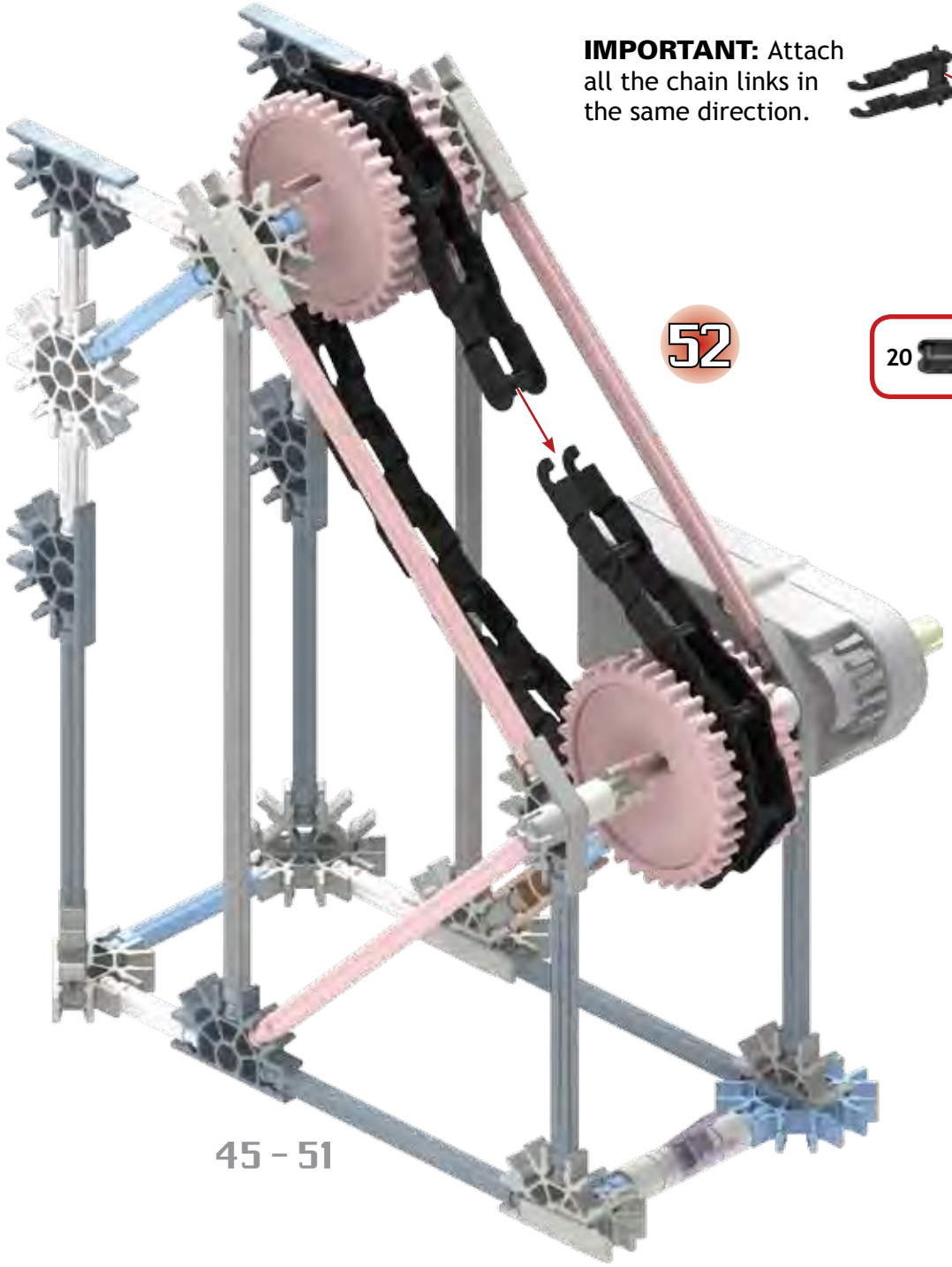

52

20

x2

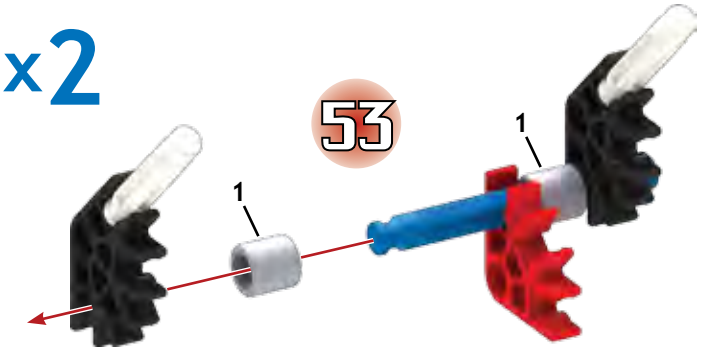

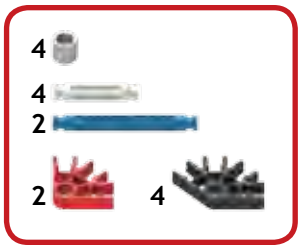

x2

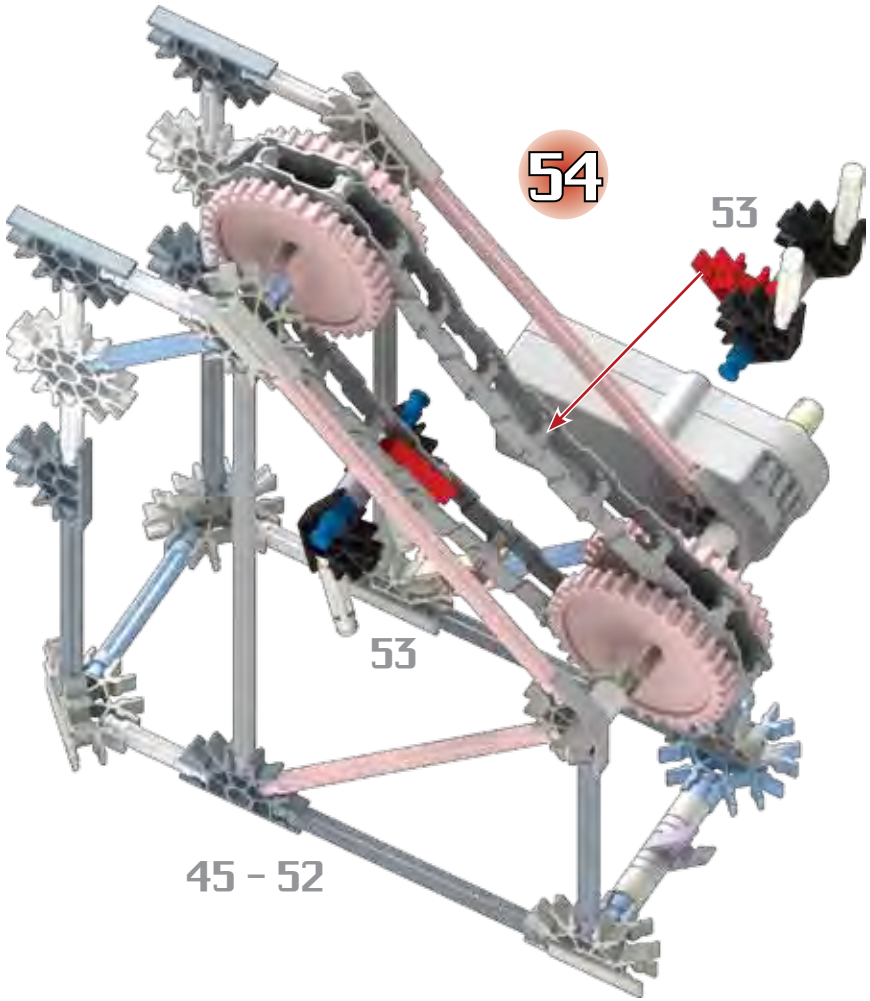

rotate model

56

55

45 – 54

3
1
3
1
3
2
1
1

Position these connectors in the middle of the rod.

45 – 56

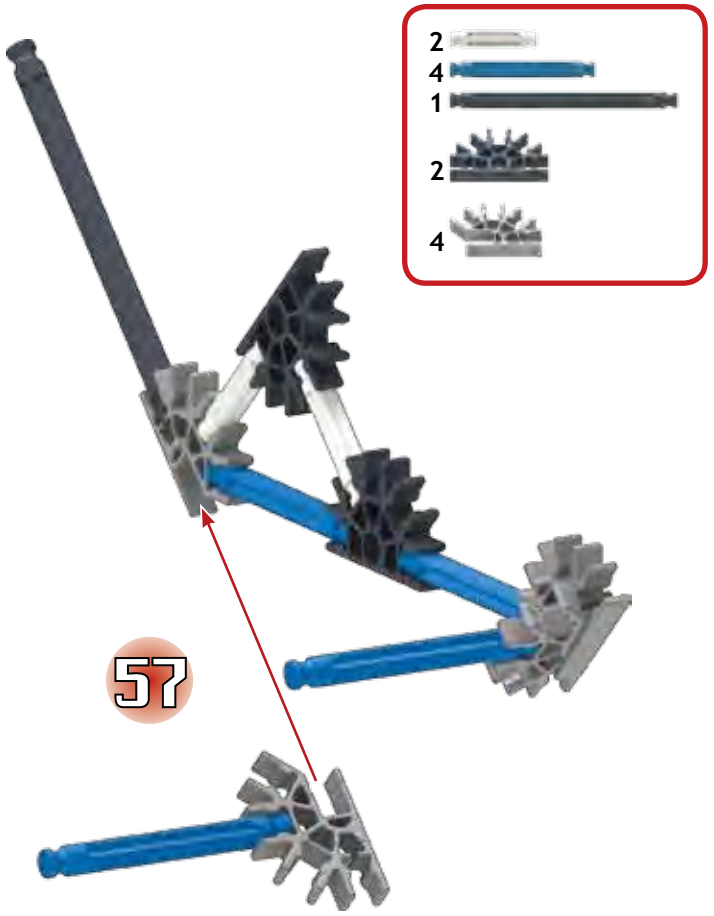
2
4
1
2
4
57

57

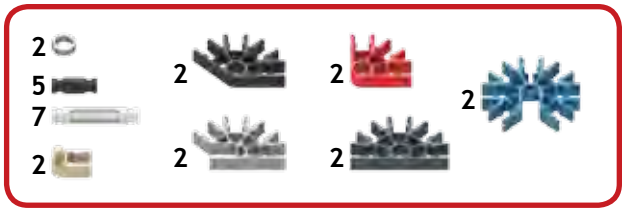
2
5
7
2
2
2
2
2
2

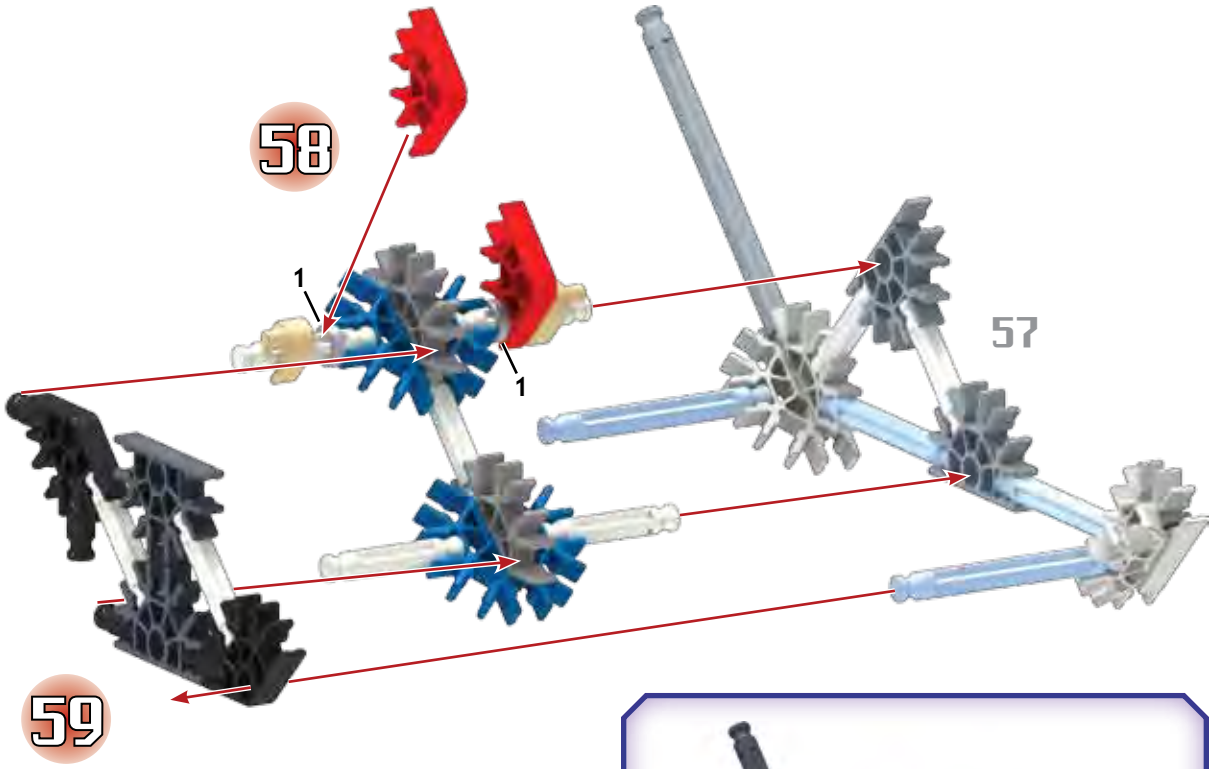
58
1
1
57
59

57 - 59

60

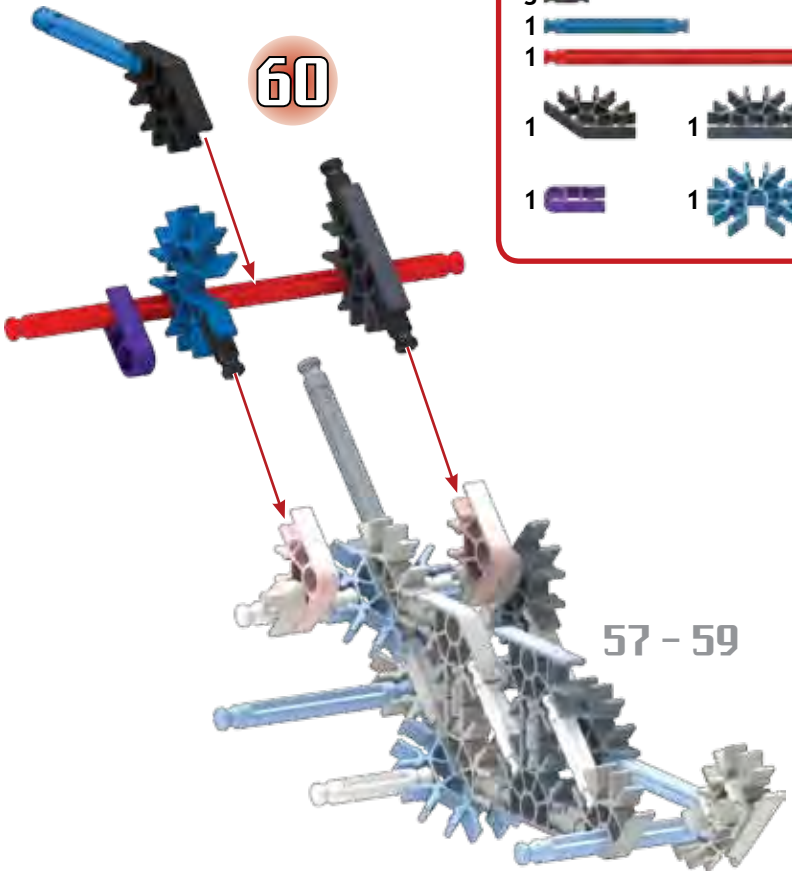

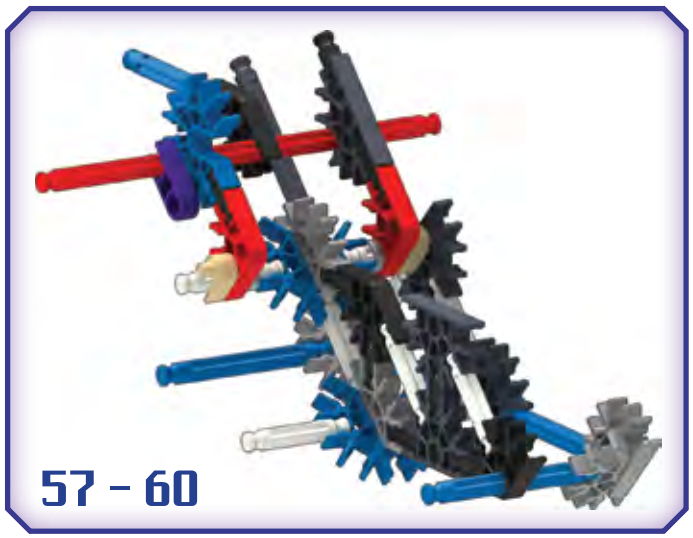

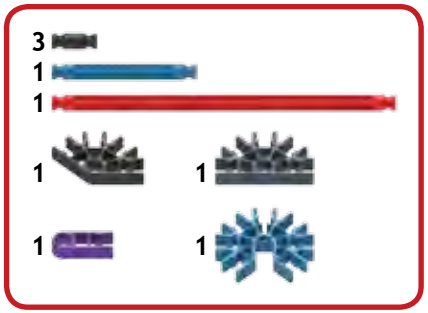

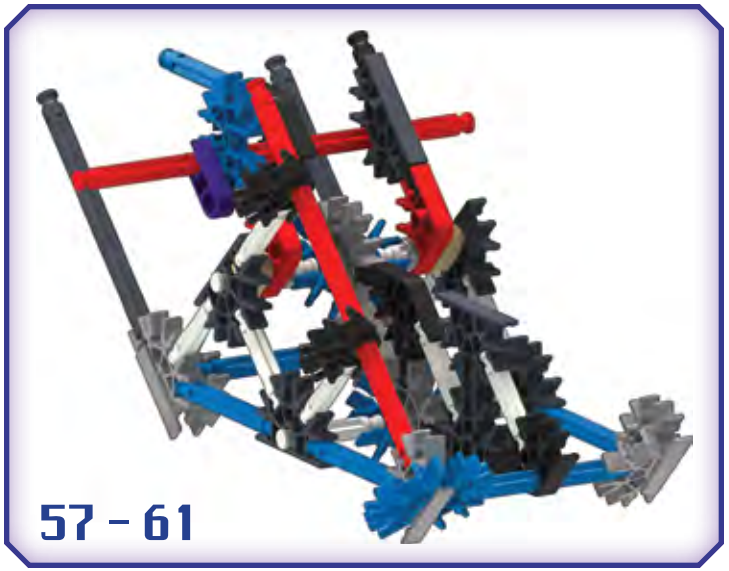

61

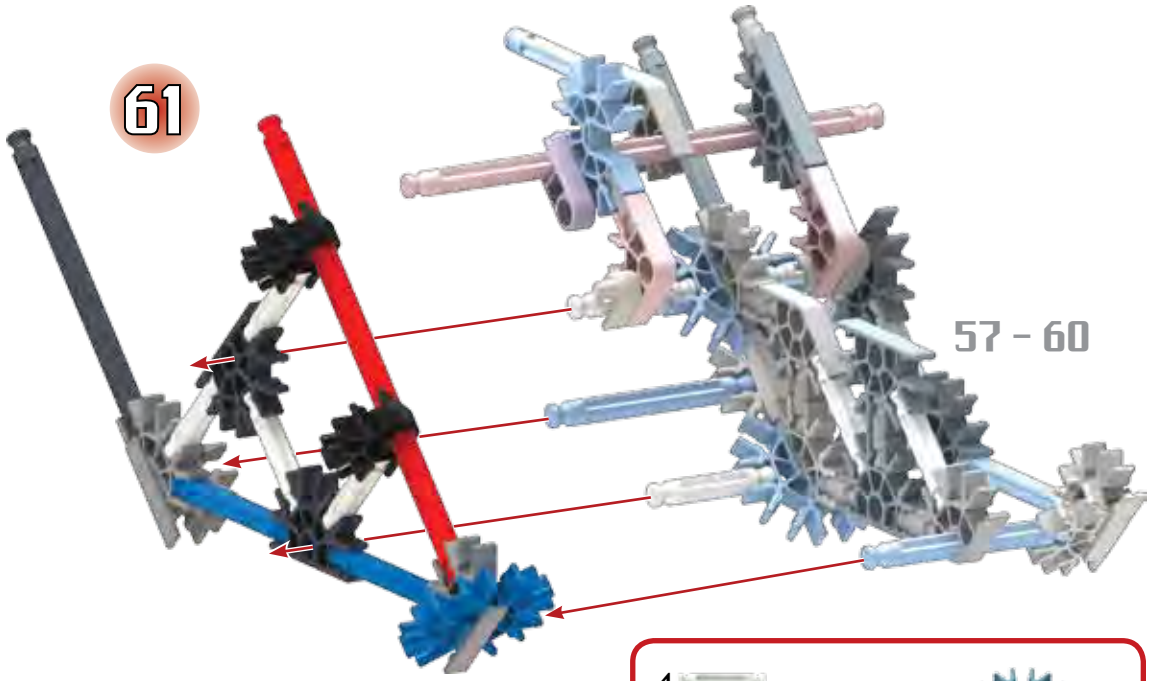

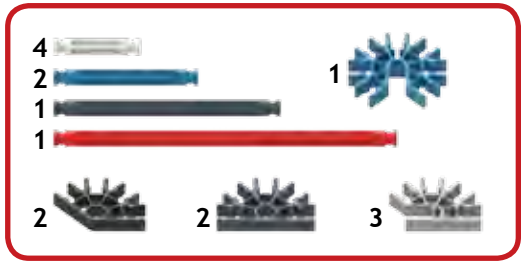

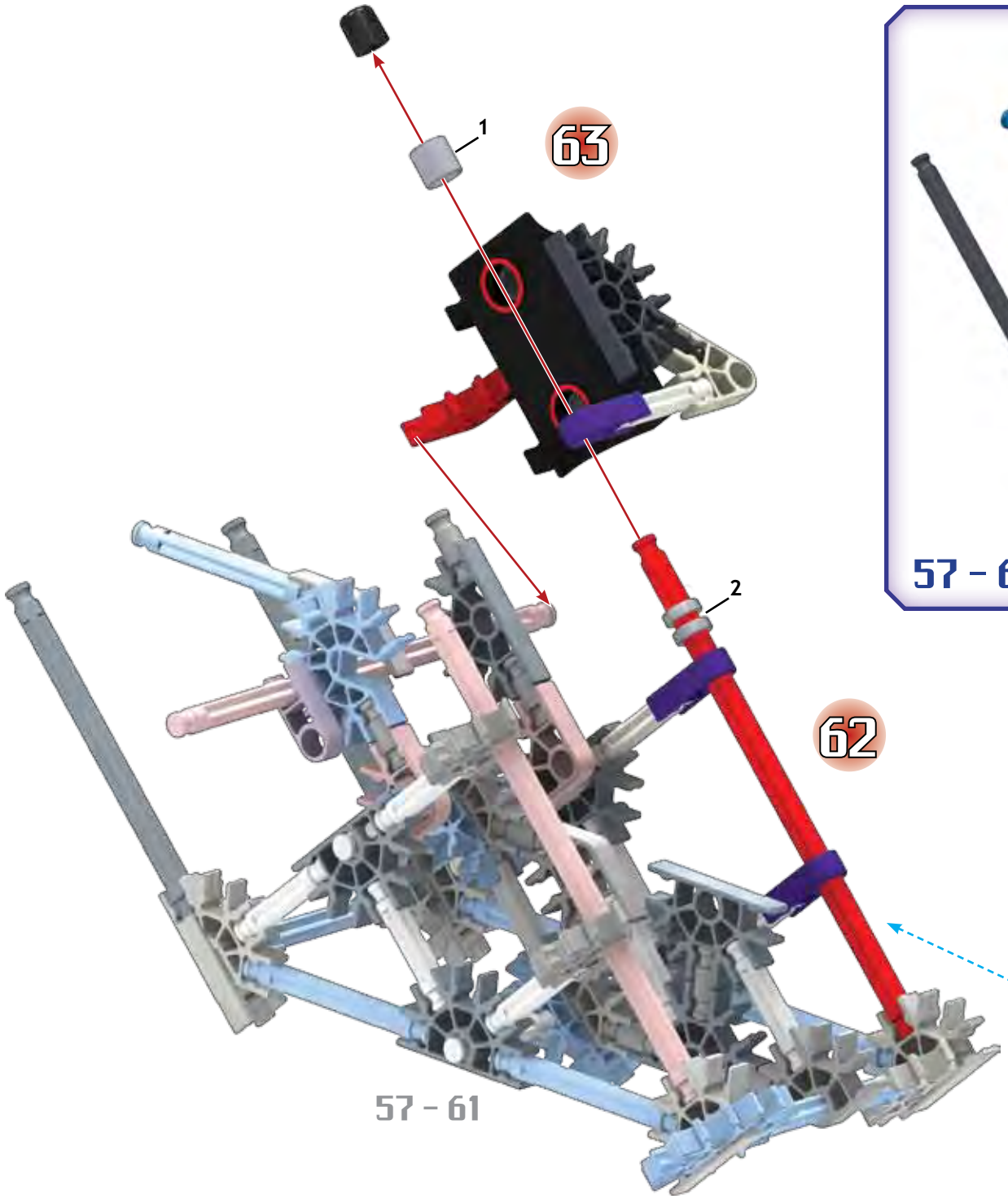
1
63
2
62
57 - 61

57 - 63

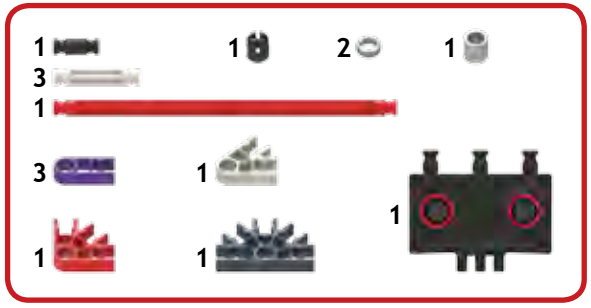
1
1
2
1
3
1
3
1
1
1
1

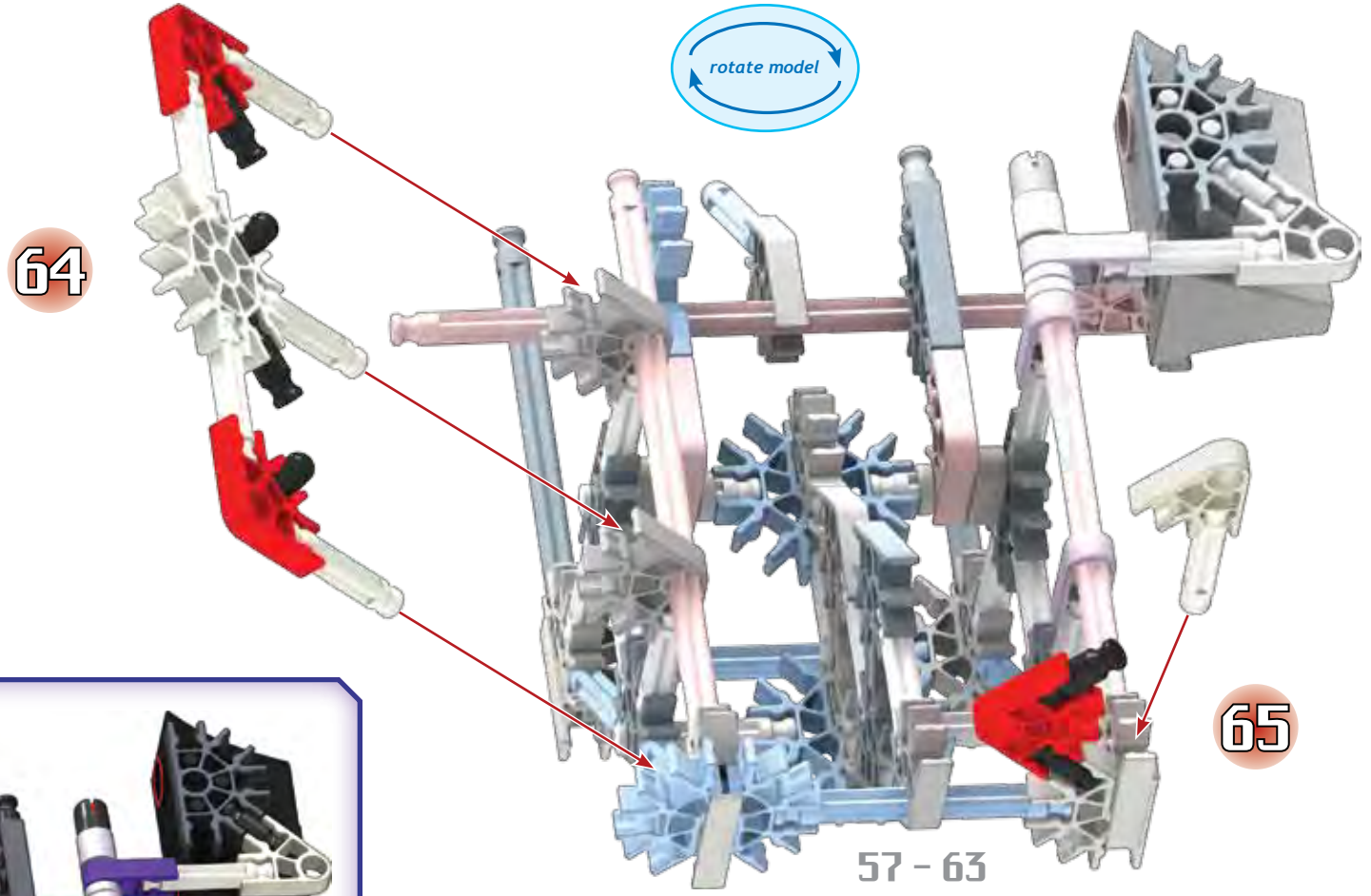
rotate model
64
65
57 – 63

57 – 65

6
6
1
3
1

1 – 3
45 – 66

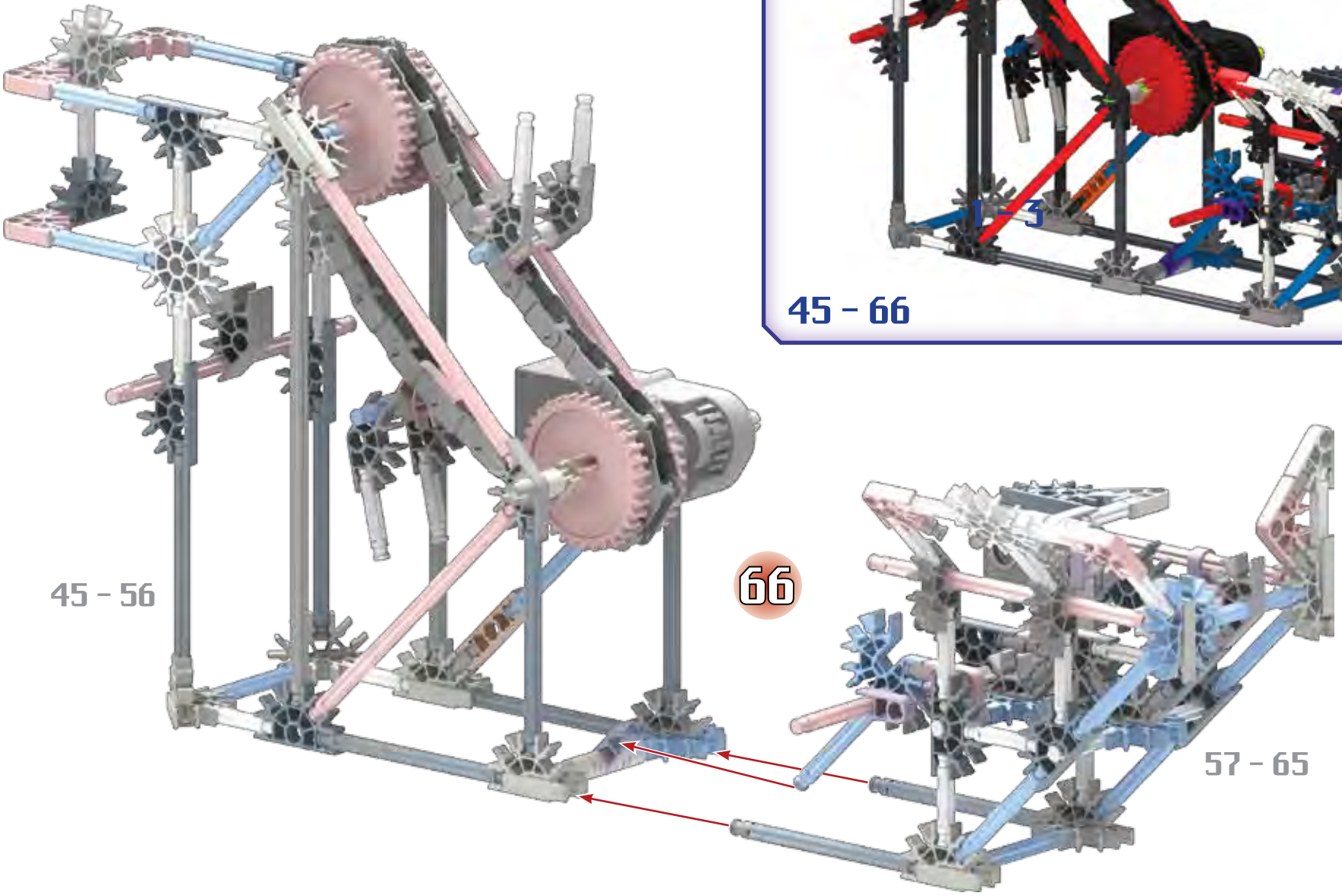
45 – 56
66
57 – 65

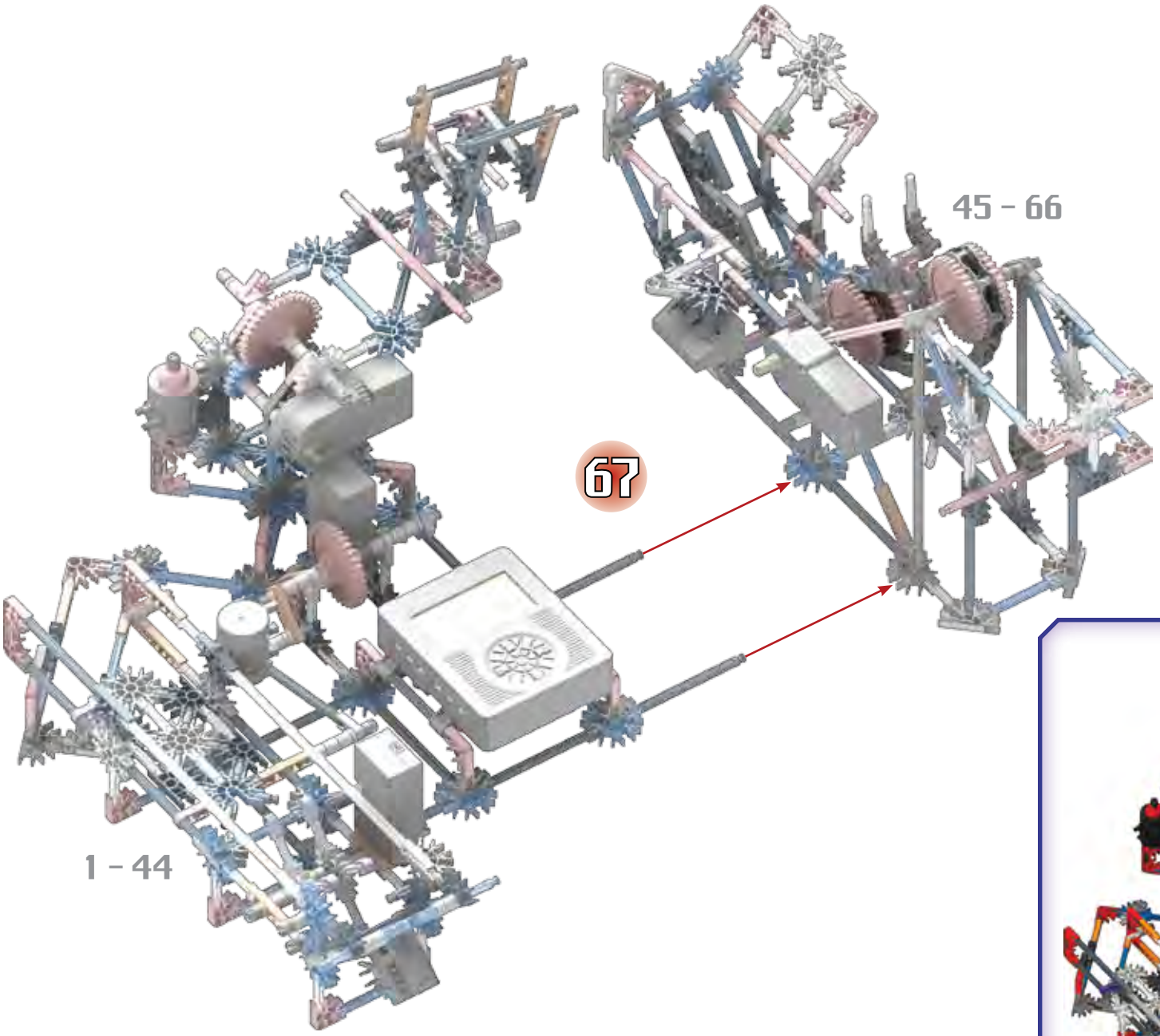
45 - 66
67
1 - 44

1 - 67

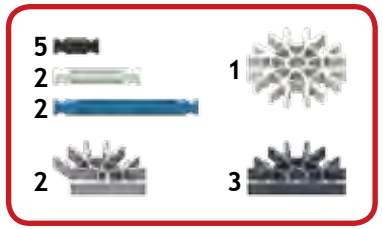
5
2
2
1
2
3

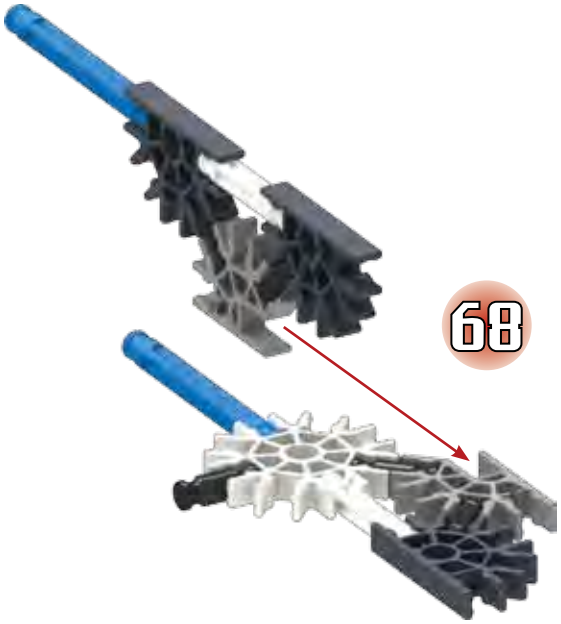
68

68

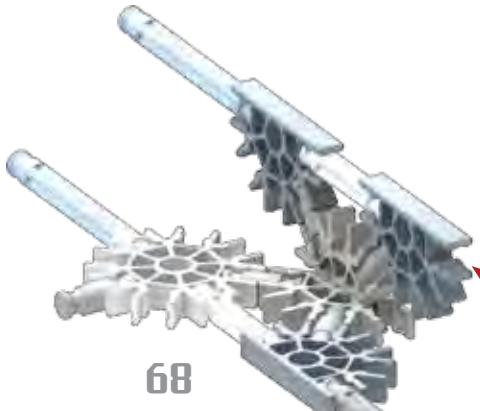
68

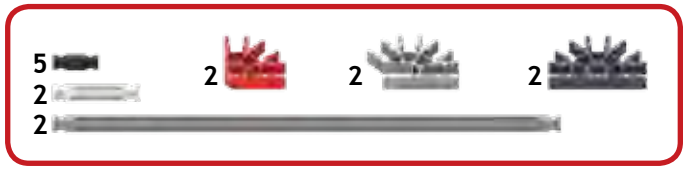
5
2
2
2
2
2

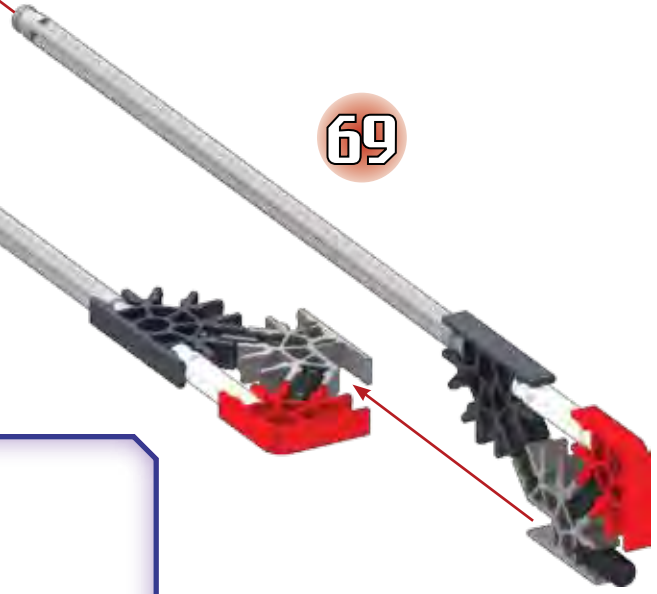
69

68 - 69

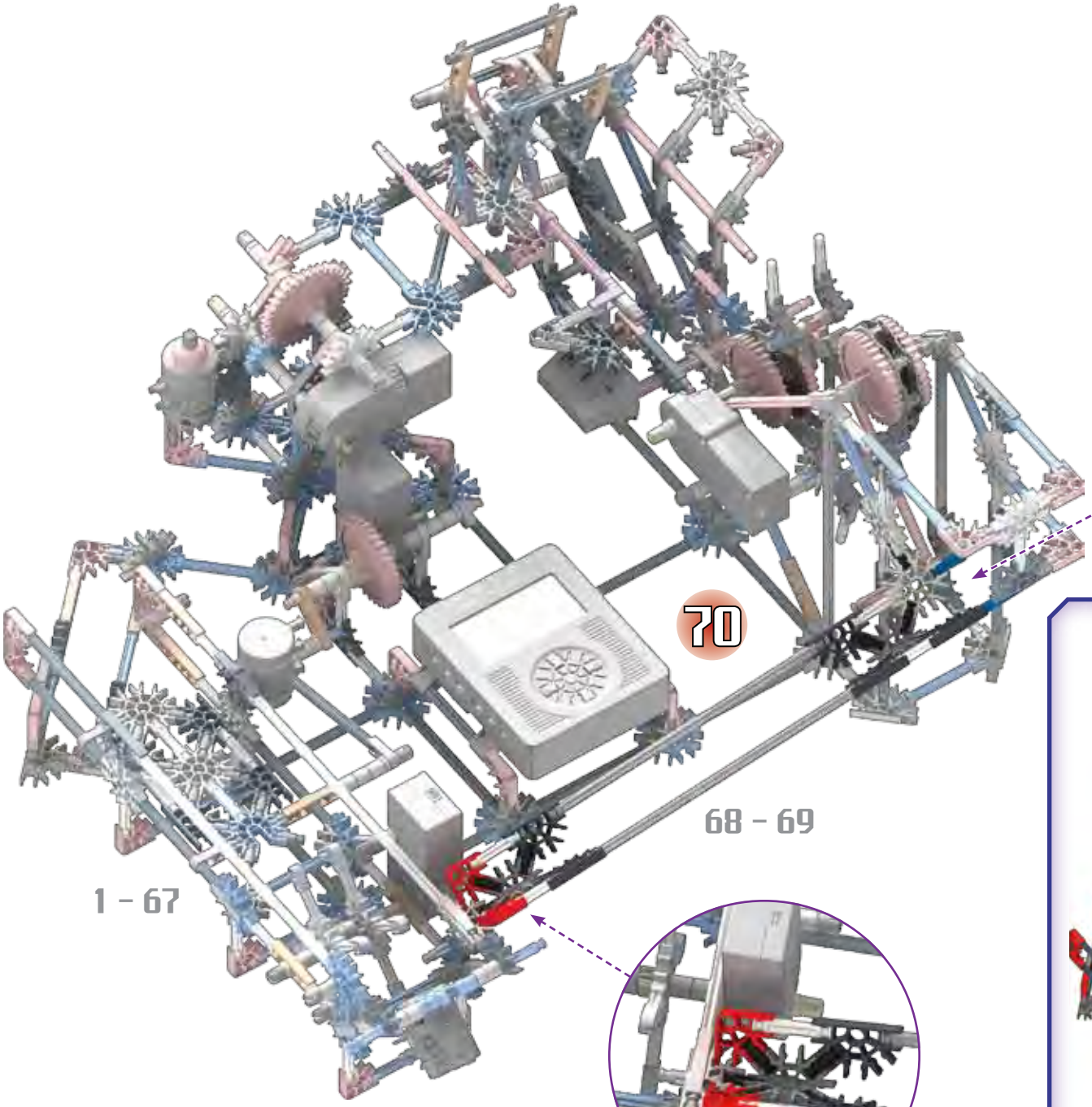
70
68 – 69
1 – 67

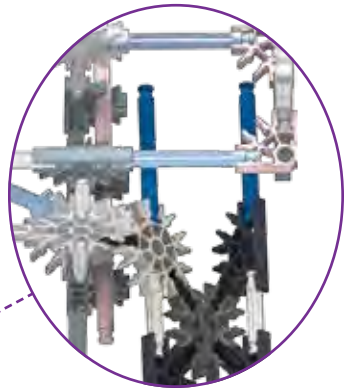

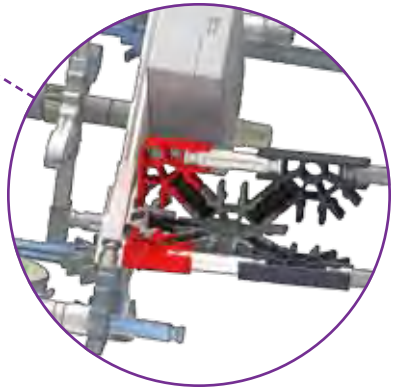

1 – 70

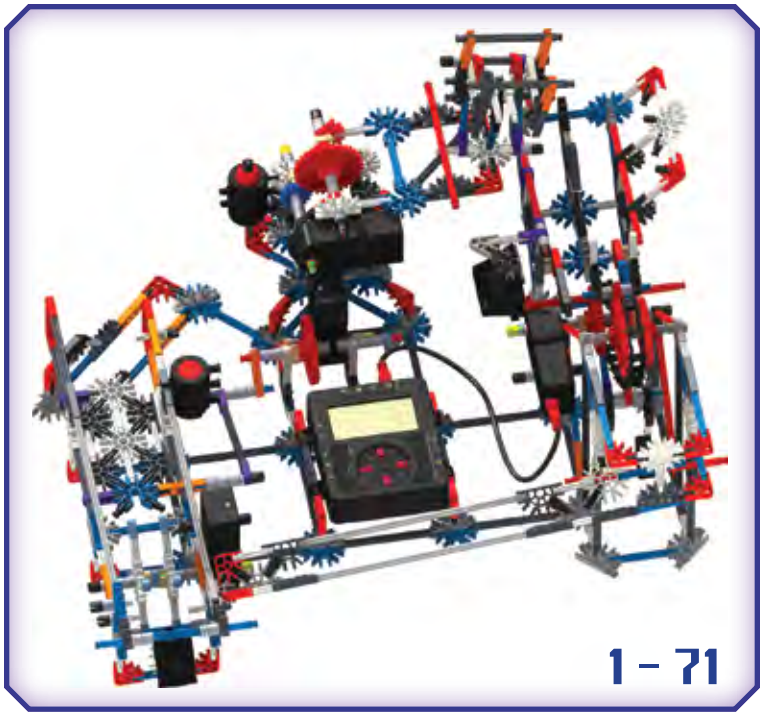

Connect Motor to Motor Output D

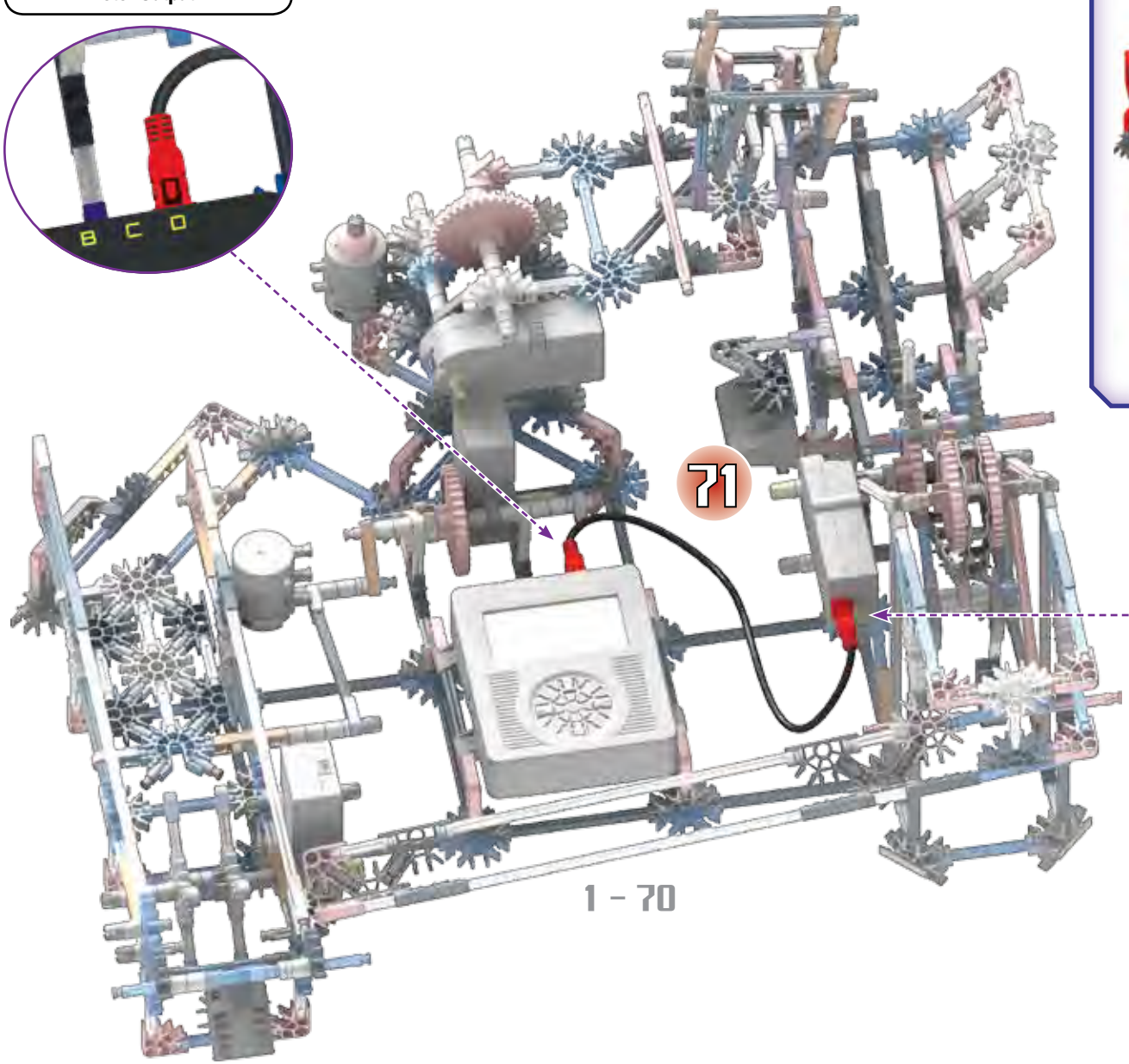

The plugs on the connection cables are directional and can only be inserted one way.

FORCING plugs into connections the wrong way will damage the plug and component, voiding any warranties!

Connect Motor to Motor Output C

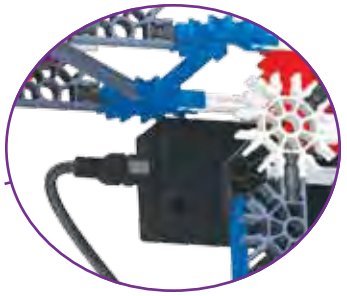

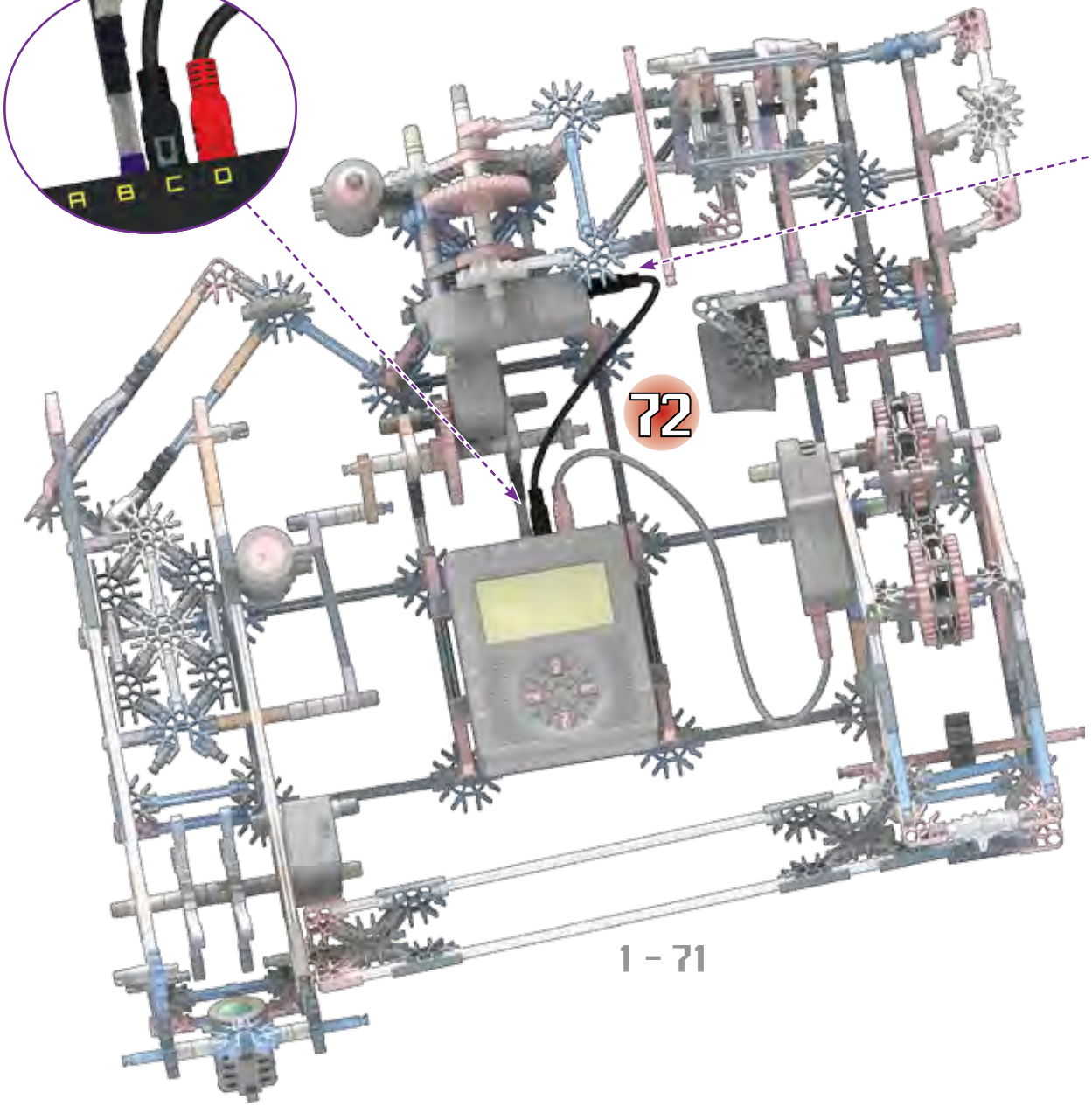

1

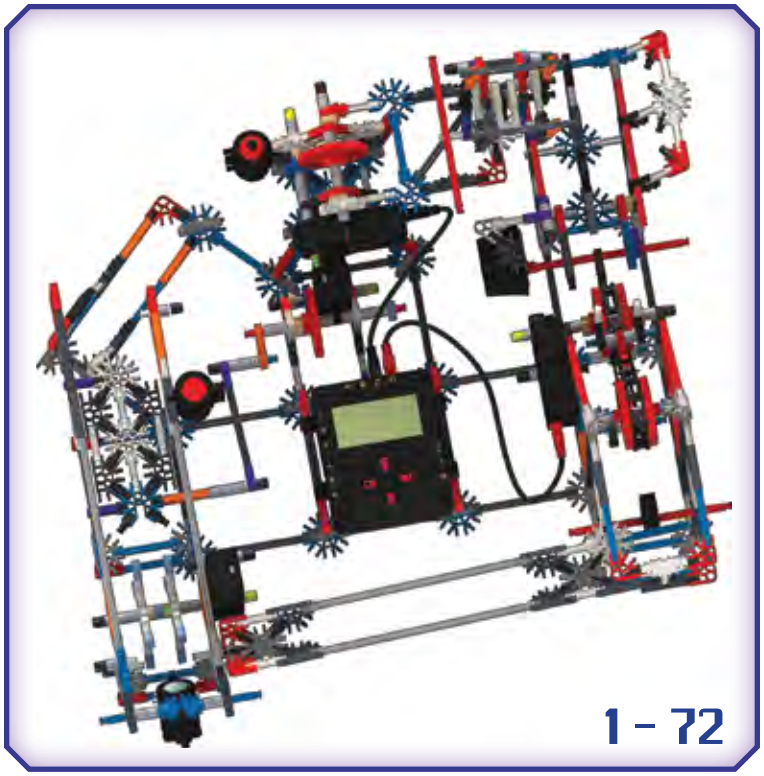

Connect Motor to
Motor Output B

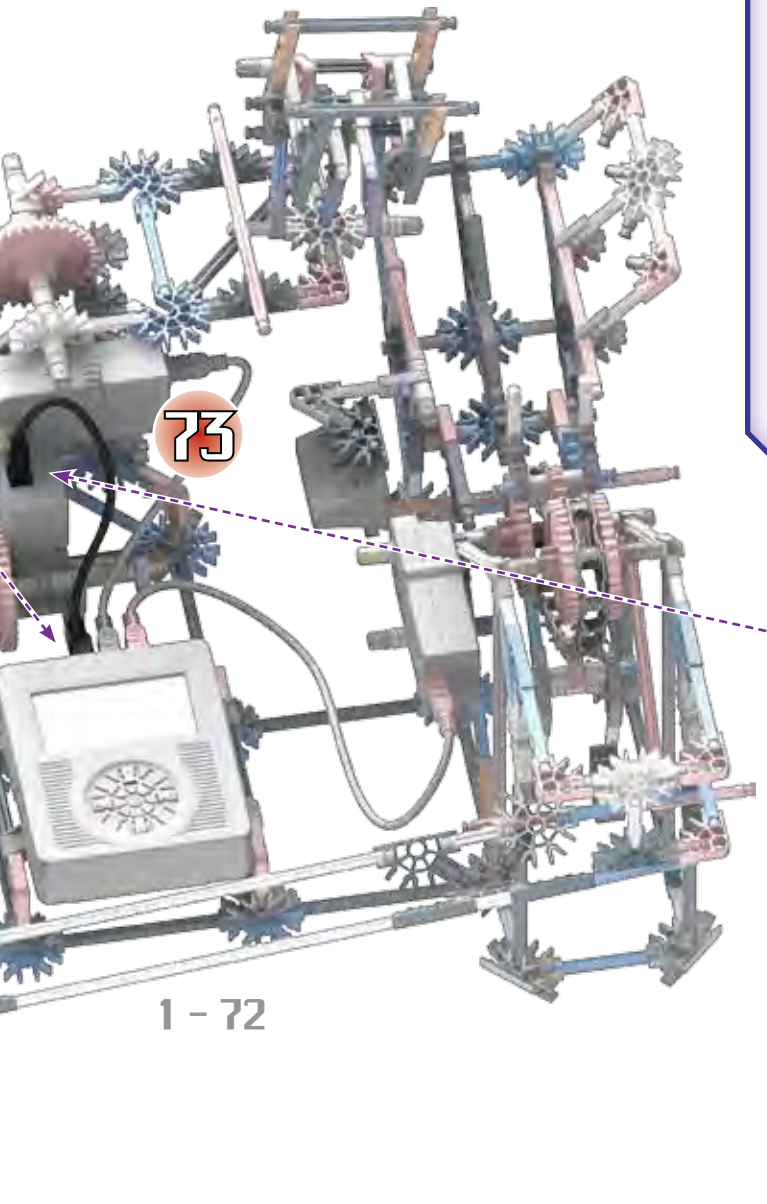

1

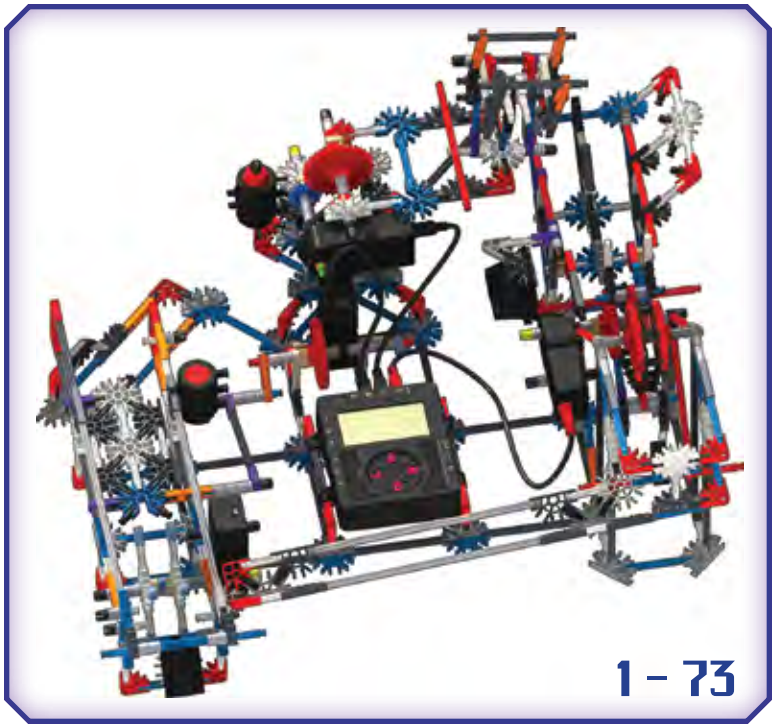

Connect Motor to Motor Output A

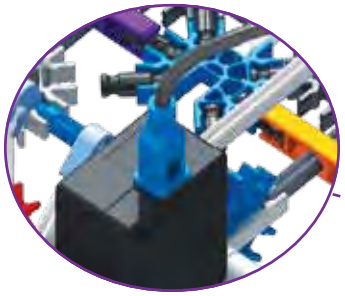

74

1 - 73

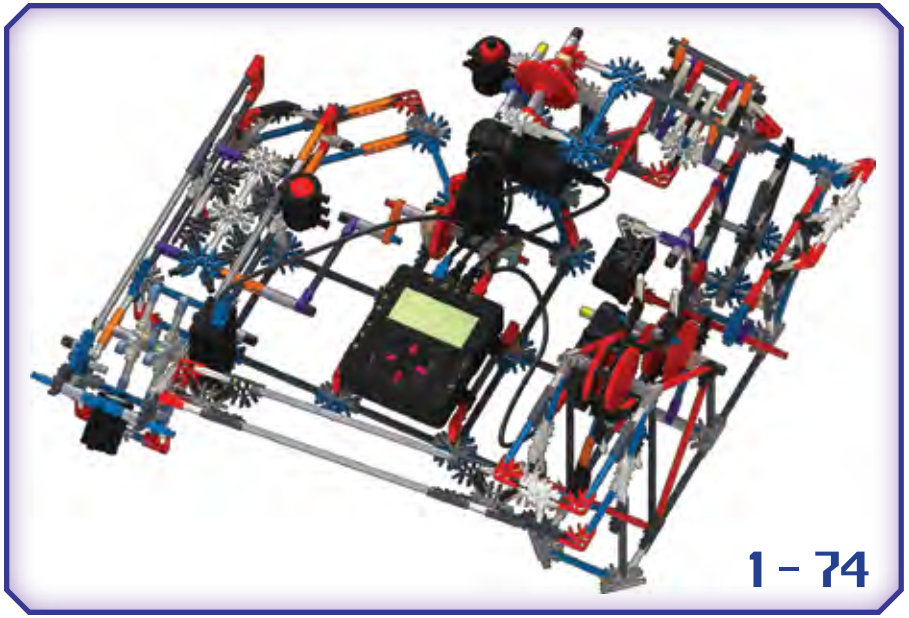

1 - 74

1

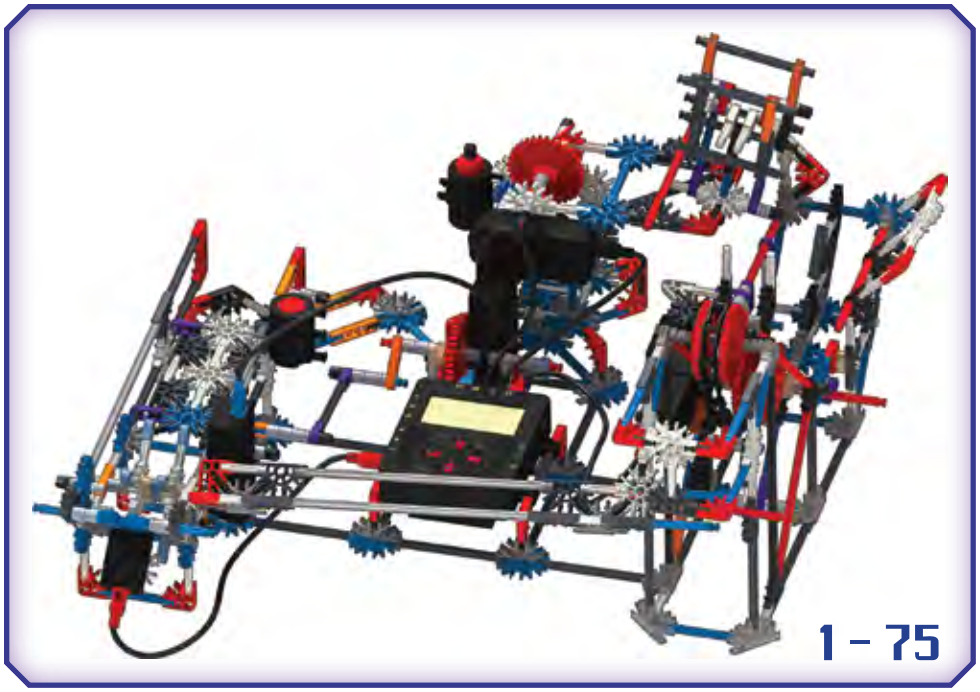

Connect Color/Light Sensor to Sensor Input 6

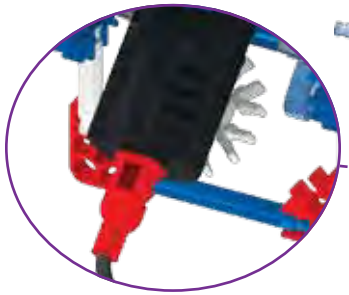

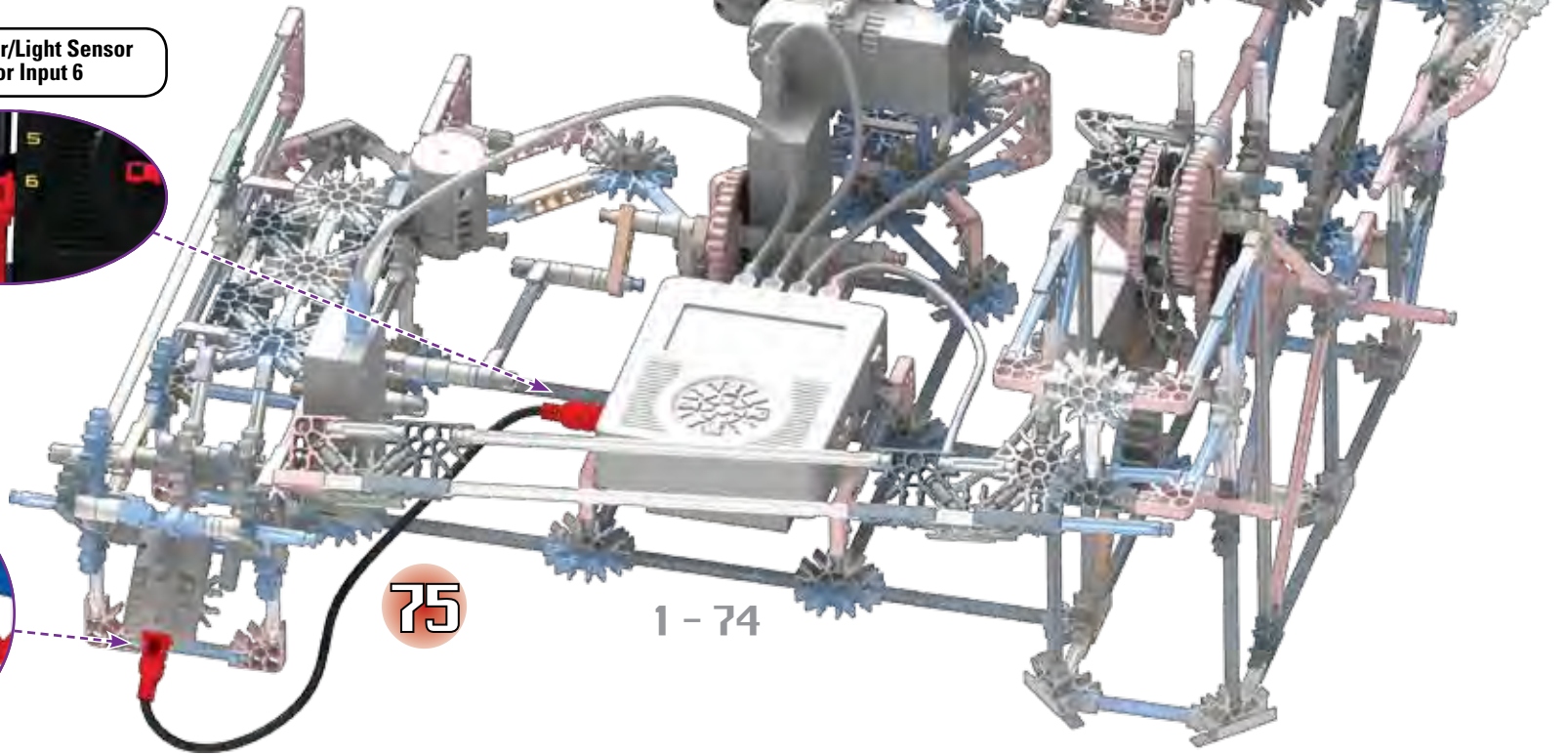

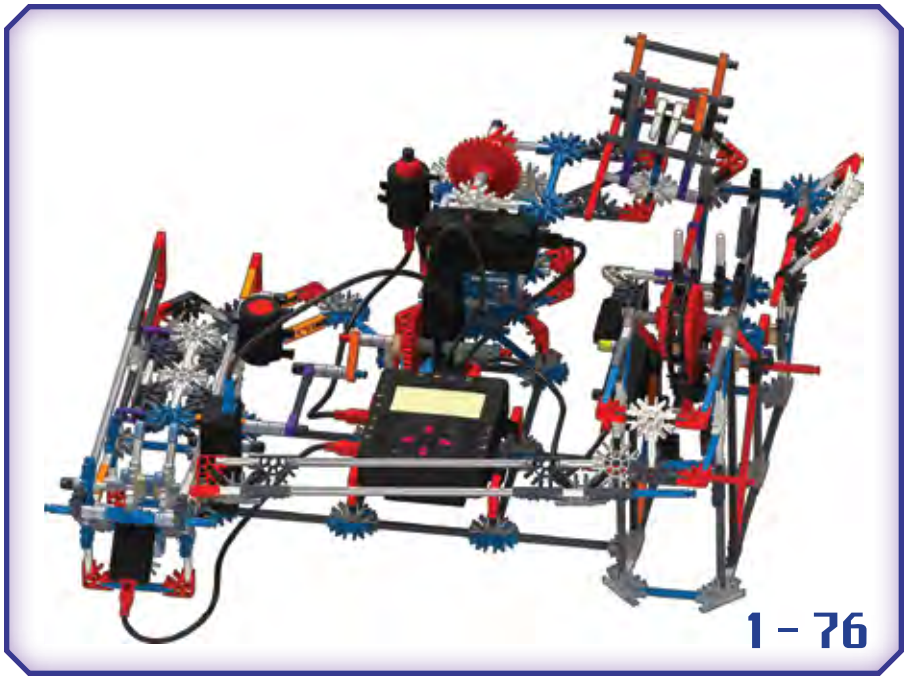

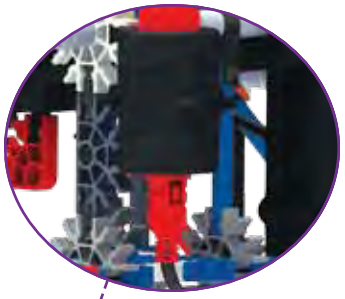

Connect Push Button Sensor to Sensor Input 3

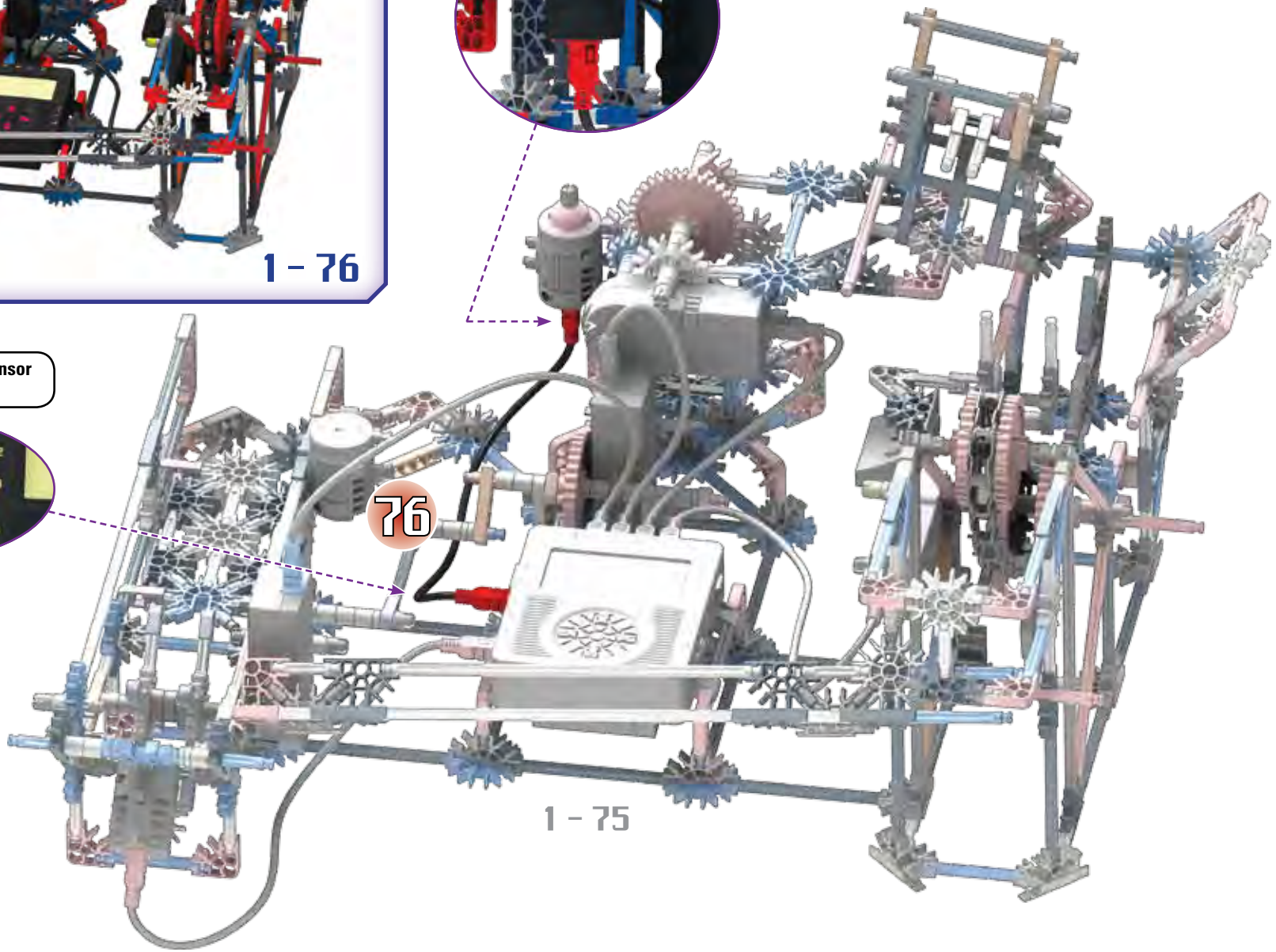

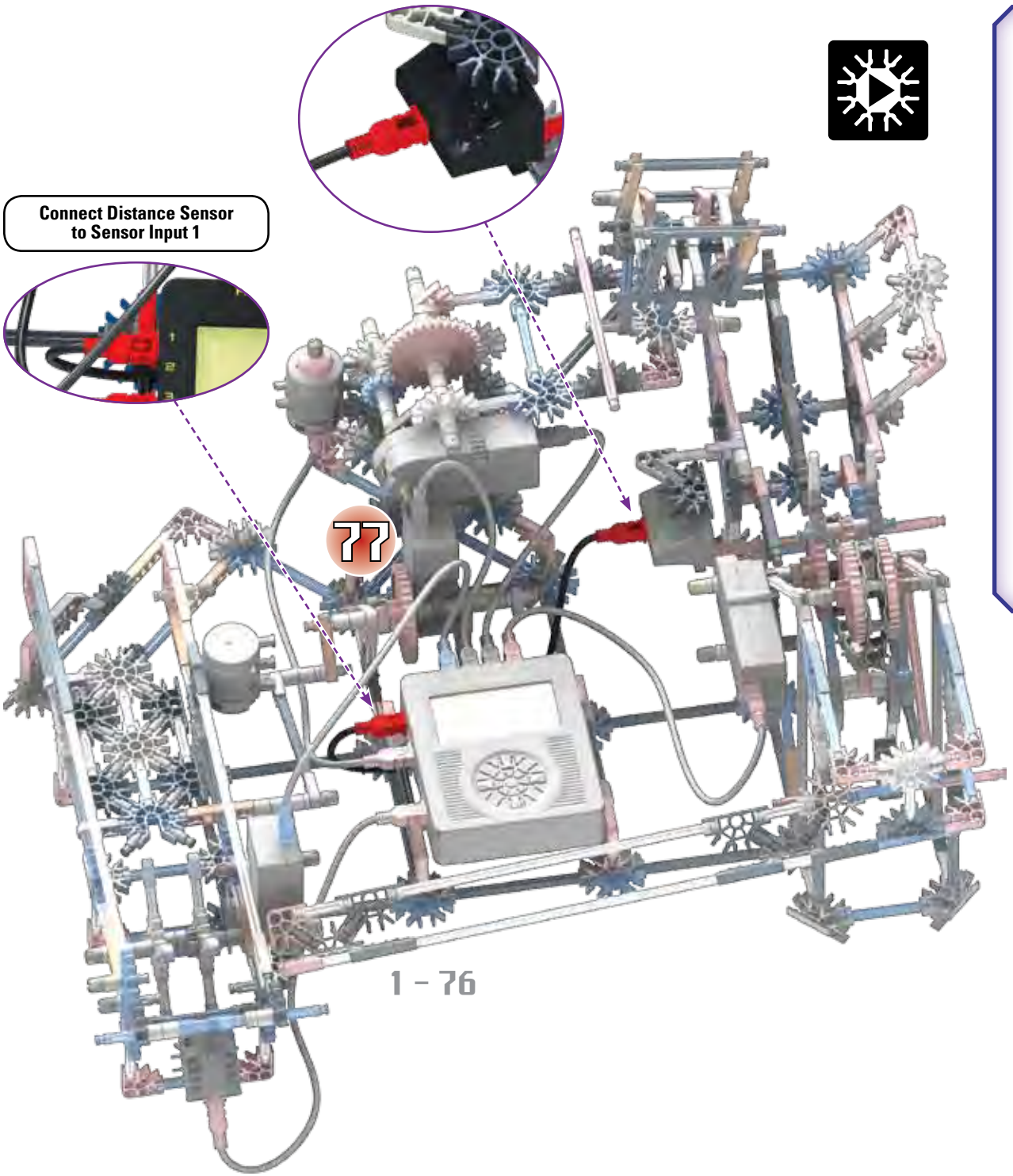
Connect Distance Sensor to Sensor Input 1
77
1 - 76

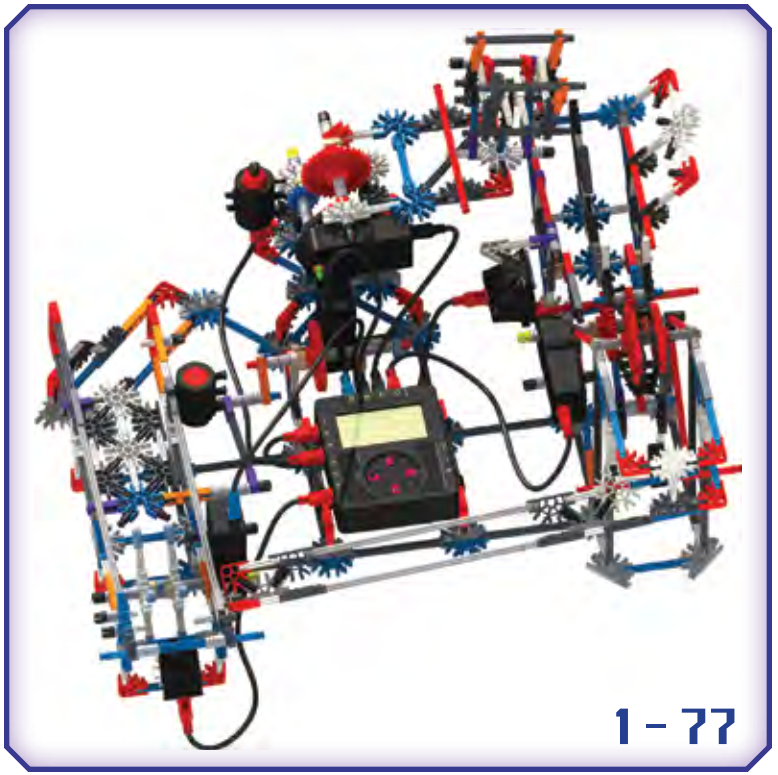
1 - 77

1

BALL FACTORY

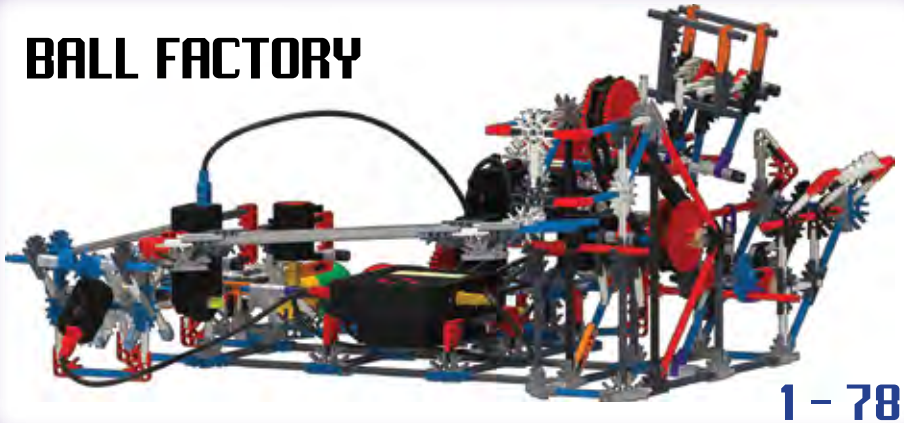

1 – 78

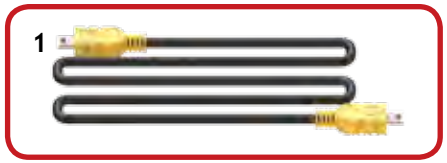

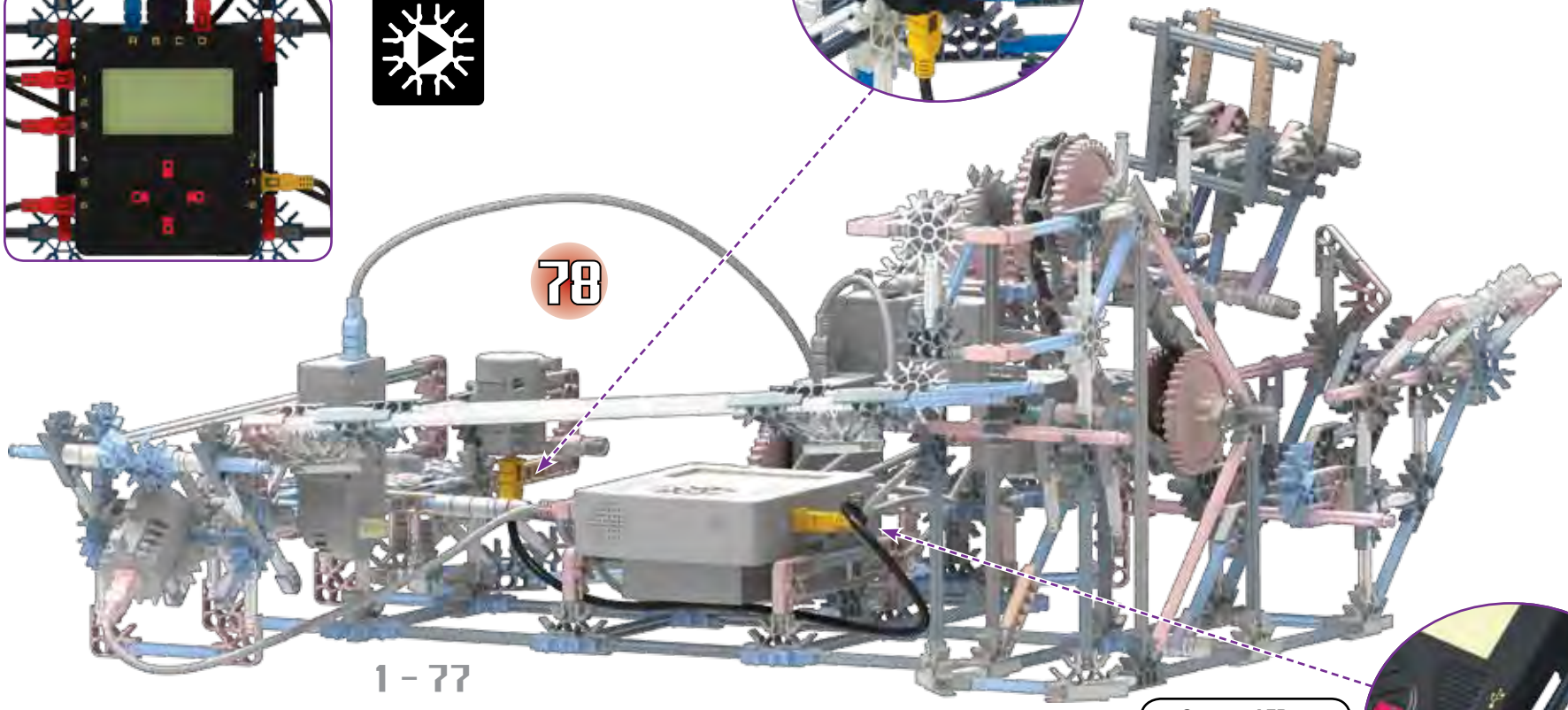

Connect LED to LED Output ▲1